MODEL 2150/2160 VideoBridge™

Auto LRC Meter

PRELIMINARY

Service Manual

Part Number 54327B September 1985

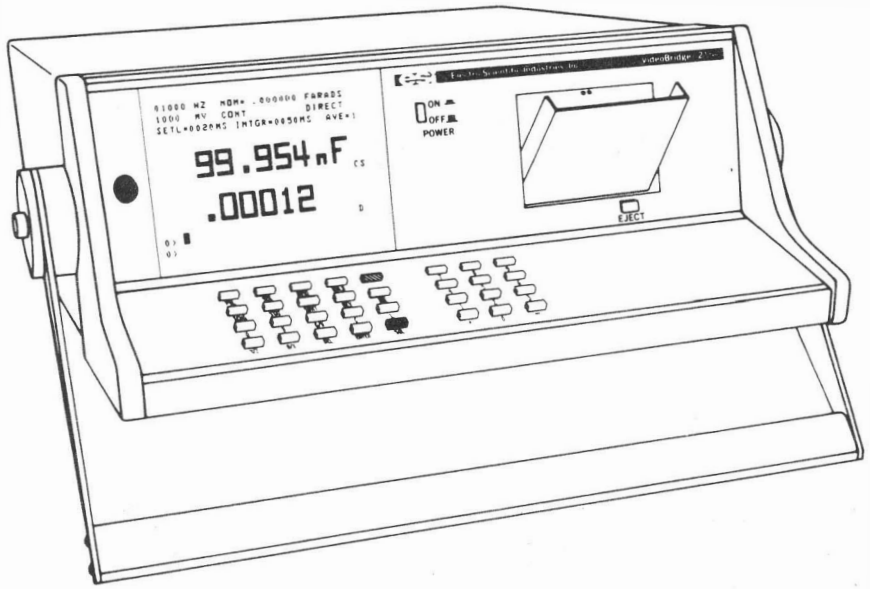

PLEASE NOTE

This document is in a preliminary stage and has not been thoroughly checked for accuracy or content.

Electro Scientific Industries, Inc.

13900 N.W. Science Park Drive • Portland, Oregon 97229 • Telephone: (503) 641-4141 • Telex 4742064

©Copyright 1985 Electro Scientific Industries, Inc.
All rights reserved • Litho in U.S.A.

ESI® Reserves the right to change specifications and other product information without notice.

ESI, KELVIN KLIPS and VideoBridge are trademarks of Electro Scientific Industries, Inc.

Molex is the trademark of Molex Incorporated

Electro Scientific Industries, Inc.
13900 NW Science Park Drive
Portland, Oregon 97229
(503) 641-4141 • Telex: 474-2064

ESI is constantly upgrading and revising its product documentation to provide the most up-to-date and accurate information to you, the customer. If you would like to participate in our documentation upgrading program and receive any new revisions or documents associated with your new ESI product, please fill out the attached card and return it to ESI.

Sincerely,

Instrument Technical Publications

Model No._____

Serial No._____

Manual Part No._____

Date Rec'd_____

P.O. No._____

Name_____ Title_____

Company_____

Address_____

_____

Attention: Instrument Technical Publications MS: T105

...® Pa... ...mber ...7A ...

NO POSTAGE
NECESSARY
IF MAILED
IN THE
UNITED STATES

BUSINESS REPLY MAIL

FIRST CLASS PERMIT NO. A-649 PORTLAND, OR. U.S.A.

POSTAGE WILL BE PAID BY ADDRESSEE

Electro Scientific Industries, Inc.

13900 N.W. Science Park Drive
Portland, Oregon 97229

PROTECT AGAINST ELECTROSTATIC DISCHARGE

In this instrument there are MOSFET semiconductors, which can be damaged by electrostatic discharge during handling. The following precautionary procedures are recommended to minimize this possibility.

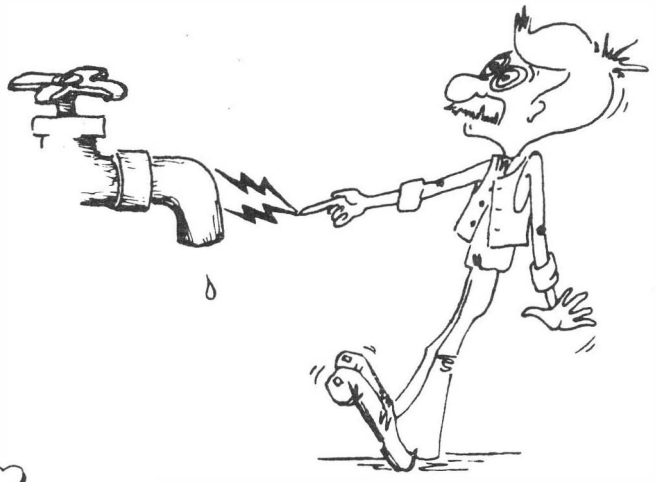

DISCHARGE PERSONAL STATIC BEFORE HANDLING DEVICES

HANDLE STATIC SENSITIVE DEVICES ONLY AT A GROUNDED, STATIC-FREE WORK STATION

HANDLE DEVICES BY THE BODY. DO NOT TOUCH THE DEVICE LEADS.

BE SURE YOUR SOLDERING IRON TIP IS GROUNDED AND DO NOT USE SOLDER-SUCKERS THAT ARE NOT ANTI—STATIC PROTECTED

AVOID HANDLING WHENEVER POSSIBLE

USE ANTI-STATIC PACKAGING FOR HANDLING AND TRANSPORT

KEEP PARTS IN MANUFACTURER'S PROTECTED CONTAINERS

DO NOT SLIDE STATIC SENSITIVE DEVICES OVER ANY SURFACE AND AVOID PLASTIC, VINYL AND STYROFOAM IN WORK AREAS

® Fl lo. : 4/

TABLE OF CONTENTS

WARNING

ELECTRICAL SHOCK HAZARD EXISTS WHEN BIAS SUPPLIES ARE CONNECTED TO THIS INSTRUMENT. WHEN EXTERNAL BIAS SUPPLIES ARE ATTACHED, THE BIAS VOLTAGES ARE PRESENT ON THE REAR PANEL BNC CONNECTORS. USE ONLY BIAS VOLTAGES UP TO +50VDC WITH EACH BIAS SUPPLY CURRENT LIMITED AT 100MA. DO NOT TOUCH, CONNECT, OR DISCONNECT THE MEASURED COMPONENT OR THE BNC CABLES WHILE BIAS VOLTAGES ARE APPLIED.

S SAFETY INFORMATION

S.1 INTRODUCTION S-1
S.2 SAFETY TERMS AND MEANINGS S-1
S.3 SAFETY WARNINGS APPEARING IN MANUAL S-1
S.4 WARNING LABELS APPEARING ON INSTRUMENT S-5

1 DESCRIPTION

1.1 INTRODUCTION 1-1
1.2 SPECIFICATIONS 1-7
1.2.1 Electrical Specifications 1-7
1.2.2 Environmental Specifications 1-17
1.2.3 General Specifications 1-17
1.2.4 Cassette Specifications (2160 Only) 1-18
1.3 OPTIONS AND ACCESSORIES 1-19
1.3.1 Accessories (must be ordered separately unless indicated) 1-19
1.3.2 Options (factory installed only) 1-20
1.3.3 Options (field installable) 1-20

2 OPERATION

2.1 FRONT PANEL CONTROLS AND INDICATORS 2-1
2.1.1 Keyboard and Key Definitions 2-1
2.1.1.1 Test Codes 2-10
2.1.1.2 Keyboard Overlay (2160 Only) 2-18
2.1.2 CRT Display 2-23
2.1.3 Cassette Tape Loader (2160 Only) 2-24
2.1.4 Other Front Panel Controls 2-24
2.2 REAR PANEL 2-25
2.2.1 Rear Panel Controls and Connectors 2-25
2.3 INSTRUMENT SETUP 2-27
2.3.1 Power Requirements 2-27
2.3.2 Applying Power 2-29
2.3.3 Connections to Unknown 2-31
2.3.4 Test-Leads vs Test-Fixtures 2-32

TABLE OF CONTENTS (Continued)

	2.3.5 Test Fixture Calibration	2-32
2.4	MEASUREMENT FUNCTIONS	2-35
	2.4.1 Programming Measurement Functions	2-36
	2.4.2 Exchanging Measurement Displays	2-38
	2.4.3 Series and Parallel Equivalent Circuit	2-40
2.5	TEST SIGNAL	2-46
	2.5.1 Frequency	2-46
	2.5.2 Signal Levels	2-50
	2.5.3 Measurement Range	2-53
	2.5.3.1 Range Hold	2-56
	2.5.4 Continuous and Single Measurements	2-59
	2.5.5 Delete	2-60
2.6	DEVIATION MEASUREMENT	2-61
	2.6.1 Nominal Value	2-61
	2.6.2 Deviation Mode	2-63
	2.6.3 Absolute Deviation	2-64
	2.6.4 Exit Deviation Mode	2-65
2.7	COMPONENT SORTING	2-66
	2.7.1 Status Display	2-67
	2.7.2 Programming Limits	2-68
	2.7.3 Bin Counters	2-72
	2.7.4 Sort Mode	2-72
	2.7.5 Component Sorting Example	2-75
	2.7.6 Handler Mode	2-79
	2.7.7 Binning Priority	2-80
	2.7.8 GO/NO-GO Mode	2-81
	2.7.9 Outputs Connector Wiring	2-85
2.8	MEASUREMENT SPEED	2-86
	2.8.1 Programming Measurement Speed	2-95
	2.8.2 Programming Integration Time	2-96
	2.8.3 Programming Settling Time	2-98
	2.8.4 Programming Measurement Averaging	2-99
2.9	CASSETTE TAPE LOADER	2-100
	2.9.1 Cassette Tape Installation	2-101
	2.9.2 Cassette Tape Loader Maintenance	2-102
	2.9.3 Cassette Tape Formatting	2-103
	2.9.4 Tape File System	2-104
	2.9.4.1 Tape Directory	2-104
	2.9.5 Saving Parameters	2-105
	2.9.5.1 Autostart	2-108
	2.9.5.2 Save Range Hold	2-108
	2.9.5.3 Keyboard Lock	2-110
	2.9.6 Loading Parameter Programs	2-110
	2.9.6.1 Load Applications Program	2-113
	2.9.6.2 File Deletion	2-115
	2.9.6.3 File Loaded	2-116
	2.9.7 Program Write-Protect	2-117
	2.9.8 Cassette Care	2-118
2.10	CAPACITANCE MEASUREMENTS WITH DC BIAS (Codes 1 and -1)	2-119

TABLE OF CONTENTS (Continued)

2.11 ERROR MESSAGES 2-121
2.11.1 Remote Output Error Codes 2-126

3 CIRCUIT DESCRIPTIONS

3.1 INTRODUCTION 3-1
3.2 MEASUREMENT OVERVIEW 3-1
3.3 MEASUREMENT CIRCUITRY 3-5
3.3.1 Digital Circuit Card (P/N 53522) 3-5
3.3.1.1 Sine Generator 3-5
3.3.1.2 Analog-to-Digital Converter 3-8
3.3.2 Analog Circuit Card (P/N 53675) 3-11
3.3.2.1 Signal to the Unknown 3-11
3.3.2.2 Range Switching 3-13
3.3.2.3 Series Spoiling Resistors 3-14
3.3.2.4 Phase Trims 3-15
3.3.2.5 Differential Amplifier 3-15
3.3.2.6 Variable Gain Amplifier 3-16
3.3.2.7 Overload Detector 3-17
3.3.2.8 Phase Rectifier 3-18
3.4 MOTHERBOARD 3-19
3.4.1 CPU 3-20
3.4.2 Standard Communications Bus 3-22
3.4.3 Extra Bus 3-23
3.4.4 Clock Signals 3-24
3.4.5 Power ON Reset 3-25
3.4.6 Video Display Generator 3-26
3.5 VIDEO CIRCUITRY 3-27
3.5.1 Video Amplifier 3-28
3.5.2 Vertical Retrace Blanking 3-29
3.5.3 Vertical Drive 3-31
3.5.4 Horizontal Drive 3-32
3.5.5 Video Control Summary 3-33
3.6 POWER SUPPLY 3-37

4 PERFORMANCE, CALIBRATION, AND MAINTENANCE

4.1 PERFORMANCE TESTS 4-1
4.1.1 Frequency Accuracy Test 4-3
4.1.2 Range Resistor Accuracy Test 4-5
4.1.3 Capacitor Accuracy Test 4-7
4.1.4 Test Level Accuracy Test 4-10
4.2 CALIBRATION 4-14
4.2.1 Equipment Required 4-15
4.2.2 Short Circuit Zero Adjustments (Analog) 4-16
4.2.3 High and Low Frequency (D) Phase Adjustments (Analog) 4-17
4.2.4 Analog Calibration Summary 4-19

TABLE OF CONTENTS (Continued)

4.2.5 Coarse/Fine Reference Adjustment (Digital) 4-20
4.3 MAINTENANCE 4-21
4.3.1 Preventive Maintenance 4-21
4.3.1.1 Cleaning 4-21
4.3.1.2 Visual Inspection 4-22
4.3.2 Troubleshooting 4-22
4.3.2.1 Troubleshooting Aids 4-22
4.3.2.2 Troubleshooting Procedure 4-23
4.4 CORRECTIVE MAINTENANCE 4-26
4.4.1 Obtaining Replacement Parts 4-26
4.4.2 VideoBridge - CRT Face Plate Cleaning 4-27
4.4.3 VideoBridge - CRT Removal/Replacement 4-29
4.4.3.1 CRT Precautions 4-29
4.4.3.2 CRT Removal/Replacement Procedure 4-31
4.4.4 Component Replacement 4-36
4.5 REPACKAGING FOR SHIPMENT 4-37

5 PARTS LISTS AND DIAGRAMS

5.1 2150/2160 FINAL ASSEMBLY (P/N 32150,32160) 5-1
5.2 FRONT END SUBASSEMBLY (P/N 46096) 5-2
5.2.1 Keyboard Circuit Assembly (P/N 45573) 5-3
5.2.2 Keyboard-to-Motherboard Cable Assembly (P/N 47112) 5-4
5.3 MOTHERBOARD CIRCUIT ASSEMBLY (P/N 54569) 5-5
5.3.1 Motherboard Cable Assembly (P/N 49302) 5-14
5.4 ANALOG CIRCUIT ASSEMBLY (P/N 53675) 5-15
5.5 DIGITAL CIRCUIT ASSEMBLY (P/N 53522) 5-21
5.6 CRT SUBASSEMBLY (P/N 46095) 5-24
5.6.1 Video Circuit Assembly (P/N 48642) 5-25
5.6.2 Back Panel Subassembly (P/N 48364) 5-28
5.7 POWER SUPPLY MODULE ASSEMBLY (P/N 45845) 5-29
5.7.1 Power Supply (B1) Circuit Assembly (P/N 45490) 5-30
5.7.2 Power Supply (B2) Circuit Assembly (P/N 45488) 5-34
5.7.3 Motherboard-to-Power Supply Interconnect Cable Assembly (P/N 47111) 5-37
5.7.4 Back Panel-to-Power Supply Cable Assembly (P/N 47115) 5-38
5.8 RS-232/CASSETTE INTERFACE CIRCUIT ASSEMBLY (P/N 52674) 5-39

A OPTIONS OPERATION

A.1 MODEL 2150/2160 HANDLER INTERFACE OPTION A-1
A.1.1 Hardware Included A-2
A.1.2 Installation A-2
A.1.3 Operation A-3
A.1.4 Calibration A-9

TABLE OF CONTENTS (Continued)

A.2 MODEL 2150/2160 REMOTE PROGRAMMING OPTIONS (GPIB AND RS-232C) A-10
A.2.1 Introduction A-10
A.2.2 GPIB Bus Structure and Supported Interface Functions A-11
A.2.3 Number of Devices A-14
A.2.4 Cable Length A-14
A.2.5 Electrical Specifications A-15
A.2.6 Signal Lines A-15
A.2.7 Bus Connector A-18
A.2.8 Instrument Address Selection A-18
A.2.9 RS-232C Interface (Optional on 2150/Standard on 2160) A-20
A.2.9.1 Channel B A-20
A.2.9.2 RS-232C Signal Flow A-21
A.2.10 Data Format A-23
A.2.11 Signal Levels A-23
A.2.12 Bus Connector A-24
A.2.13 Selecting the Baud Rate A-25
A.2.14 Cable Length A-26
A.2.15 Remote Device Option Installation A-26
A.2.16 Remote Programming A-28
A.2.16.1 Instrument Setup A-28
A.2.16.2 Result Accumulation A-37
A.2.16.3 Measurement Protocol A-38
A.2.17 Calibration A-39
A.2.18 GPIB Sample Program A-40
A.2.19 RS-232C Sample Program A-42
A.3 NON-VOLATILE MEMORY A-44
A.4 +200V DC BIAS OPTION (SP5240) A-46

B OPTIONS PARTS LISTS AND DIAGRAMS

B.1 GENERAL HANDLER INTERFACE CIRCUIT ASSEMBLY (P/N 47895) B-1
B.2 HANDLER INTERFACE CIRCUIT ASSEMBLY (MCT BROWNE) (P/N 47897) B-4
B.3 HANDLER INTERFACE CIRCUIT ASSEMBLY (DAYMARC) (P/N 47896) B-6
B.4 GENERAL PURPOSE INTERFACE BUS (IEEE-488) INTERFACE CIRCUIT ASSEMBLY (P/N 46114) B-8
B.5 RS-232 INTERFACE CIRCUIT ASSEMBLY (P/N 46724) B-10
B.6 SP5240 (+200V DC BIAS OPTION) CIRCUIT ASSEMBLY (P/N 56482) B-13

LIST OF ILLUSTRATIONS

Fig. No.	Title	Page No.
S-1	Warning Label Locations	S-5
2-1	Model 2160 Front Panel	2-1
2-2	Model 2160 Front Panel with Overlay	2-19
2-3	CRT Display Formats	2-23
2-4	Rear Panel	2-25
2-5	Line Voltage Settings	2-27
2-6	Power Cord Connectors	2-28
2-7	Power ON/OFF Switch	2-29
2-8	Connection to Unknown	2-31
2-9	Measurement Display	2-37
2-10	Series and Parallel Equivalent Circuit Modes	2-42
2-11	Component Sorting	2-66
2-12	Sorting Mode Preparation Checklist	2-73
2-13	-8 CODE and 26 CODE Display Format	2-79
2-14	Detector and Generator Reversal Measurement Sequences	2-87
2-15	Sample Time	2-88
2-16	Measurement Cycles	2-90
2-17	Measurement Averaging (Generator Reversal)	2-91
2-18	Cassette Tape Installation	2-101
2-19	Cleaning Recording/Playback Heads	2-102
2-20	Swivel and Push-Out Write-Protect Features	2-117
2-21	Capacitance Measurements with Bias	2-120
3-1	Block Diagram	3-1
3-2	Model 2150/2160 Impedance Formulas	3-4
3-3	Sine Generator Block Diagram	3-5
3-4	A/D Converter Simplified Diagram	3-8
3-5	Level Set, Filter, and Power Amplifier Block Diagram	3-11
3-6	Range Switching Block Diagram	3-13
3-7	Series Spoiling Resistors	3-14
3-8	Phase Trims	3-15
3-9	Differential Amplifier	3-15
3-10	Variable Gain Amplifier	3-16
3-11	Overload Detector	3-17
3-12	Phase Rectifier	3-18
3-13	Motherboard Simplified Diagram	3-19
3-14	Clock Signals	3-24
3-15	Power ON Reset	3-25
3-16	Video Circuit Block Diagram	3-27
3-17	Video Amplifier	3-28
3-18	Vertical Retrace Blanking	3-29
3-19	Vertical Drive	3-31

LIST OF ILLUSTRATIONS (Continued)

Fig. No.	Title	Page No.
3-20	Horizontal Drive and High Voltage	3-32
3-21	Video Control Trimmer Locations	3-36
3-22	Power Supply Diagnostic LED Locations	3-37
4-1	Analog Circuit Assembly and Trimmer Locations	4-19
4-2	Face Plate Removal Procedure	4-27
4-3	Model 2160 Rear View	4-31
5-1	Keyboard Circuit Assembly (P/N 45573)	5-3
5-2	Keyboard-to-Motherboard Cable Assembly (P/N 47112)	5-4
5-3	Motherboard Circuit Assembly (P/N 54569)	5-8
5-4	Motherboard Cable Assembly (P/N 49302)	5-14
5-5	Analog Circuit Assembly (P/N 53675)	5-19
5-6	Digital Circuit Assembly (P/N 53522)	5-22
5-7	Video Circuit Assembly (P/N 48642)	5-27
5-8	Power Supply B1 Circuit Assembly (P/N 45490)	5-32
5-9	Power Supply B2 Circuit Assembly (P/N 45488)	5-35
5-10	Motherboard-to-Power Supply Interconnect Cable Assembly (P/N 47111)	5-37
5-11	Back Panel-to-Power Supply Cable Assembly (P/N 47115)	5-38
5-12	RS-232/Cassette Interface (Optional on 2150) Circuit Assembly (P/N 52674)	5-40
A-1	Handler Interface Circuit Assembly Location	A-3
A-2	Handler Interface Option Signal Timing	A-6
A-3	Handler Interface Circuit Card	A-8
A-4	A Typical IEEE-488 Bus Based System	A-12
A-5	IEEE-488 Bus Interconnection Configurations	A-14
A-6	A Typical Handshake Cycle	A-16
A-7	GPIB Address Switches	A-19
A-8	RS-232C VideoBridge-to-Terminal Connections	A-22
A-9	RS-232C VideoBridge-to-Printer Connections	A-22
A-10	Data Format	A-23
A-11	Selecting the Baud Rate	A-25
A-12	Remote Device Options Circuit Card Locations	A-27
B-1	General Handler Interface Circuit Assembly (P/N 47895)	B-2
B-2	MCT Browne Handler Interface Circuit Assembly (P/N 47897)	B-5
B-3	Daymarc Handler Interface Circuit Assembly (P/N 47896)	B-7
B-4	General Purpose Interface Bus (IEEE-488) Circuit Assembly (P/N 46114)	B-9
B-5	RS-232C Interface Circuit Assembly (P/N 46724)	B-11
B-6	Model SP5240 (+200V DC Bias Option) Circuit Assembly (P/N 56482)	B-17

LIST OF TABLES

Table No.	Title	Page No.
1-1	Capacitance Measurement Accuracy	1-8
1-2	Inductance Measurement Accuracy	1-9
1-3	Resistance/Conductance Measurement Accuracy	1-10
1-4	Impedance Ranges vs. Test Signal Level (typical at 1kHz)	1-11
1-5	Input Protection Limits	1-15
2-1	Model 2150/2160 Test Code Functions	2-11
2-2	Measurement Functions	2-35
2-3	Test Frequencies Below 10kHz and Divisors of 60kHz Yielding Integral Quotients	2-47
2-4	Test Frequencies Above 10kHz	2-48
2-5	Test Level vs. Impedance (typical at 1kHz)	2-51
2-6	Model 2150/2160 Impedance Ranging Chart	2-54
2-7	Reactance Chart	2-55
2-8	VideoBridge Outputs Connector Wiring	2-85
2-9	Preset Measurement Speeds	2-93
2-10	Preset Measurement Parameters	2-95
2-11	Integration Time Chart	2-97
3-1	Standard Bus Signals and Card Edge Connections	3-22
3-2	Extra Bus Signals and Card Edge Connections	3-23
3-3	Summary of Video Controls	3-36
A-1	VideoBridge OUTPUTS Connector Wiring	A-7
A-2	IEEE-488 Interface Functions Supported by Model 2150/2160	A-13
A-3	IEEE-488 Bus Connector Contact Assignments	A-18
A-4	RS-232C Receive and Transmit Signal Levels	A-23
A-5	RS-232C Control Signal Levels	A-23
A-6	RS-232C Pin Assignments	A-24
A-7	Model 2150/2160 Remote Setup Dictionary	A-29

SECTION S
SAFETY INFORMATION

S.1 INTRODUCTION

Read and follow the CAUTIONS and WARNINGS in this manual. They are designed to emphasize safety during all phases of operation and maintenance.

S.2 SAFETY TERMS AND MEANINGS:

CAUTION -- Statements that identify conditions or practices that could result in damage to the equipment or property.

WARNING -- Statements that identify conditions or practices that could result in personal injury or loss of life. In addition, damage to the equipment or other property may result.

DANGER -- Indicates a personal injury hazard is near the marking.

S.3 WARNINGS APPEARING IN THIS MANUAL:

DANGER

THE VIDEO CIRCUITRY CONTAINS DANGEROUSLY HIGH VOLTAGE. EXERCISE EXTREME CARE TO AVOID POSSIBLE ELECTRIC SHOCK WHICH MAY RESULT IN SEVERE INJURY OR DEATH.

DANGER

ALL PARTS OF THE POWER SUPPLY ASSEMBLY INCLUDING INPUT CIRCUIT COMMON ARE AT OR ABOVE POWER LINE VOLTAGE. THE ENERGY AVAILABLE AT ANY POINT ON THE ASSEMBLY MAY BE LIMITED ONLY BY THE INPUT FUSE. DO NOT ATTEMPT SERVICE OPERATIONS. FAILURE TO OBSERVE THIS WARNING MAY RESULT IN SEVERE INJURY OR DEATH.

DANGER

ELECTRICAL SHOCK HAZARD EXISTS WHEN A BIAS SUPPLY IS CONNECTED TO THIS INSTRUMENT. USER SUPPLIED BIAS VOLTAGE MAY BE PRESENT AT INSTRUMENT TERMINALS AND TEST FIXTURES. USE ONLY BIAS VOLTAGES UP TO +200VDC AND BIAS SUPPLIES CURRENT LIMITED AT 100mA. DO NOT TOUCH, CONNECT, OR DISCONNECT THE UNKNOWN COMPONENT OR BNC CABLES WHILE A BIAS VOLTAGE IS APPLIED. FAILURE TO OBSERVE THIS WARNING MAY RESULT IN SEVERE INJURY OR DEATH.

WARNING

ELECTRICAL SHOCK HAZARD EXISTS WHEN BIAS SUPPLIES ARE CONNECTED TO THIS INSTRUMENT. WHEN EXTERNAL BIAS SUPPLIES ARE ATTACHED, THE BIAS VOLTAGES ARE PRESENT ON THE REAR PANEL BNC CONNECTORS. USE ONLY BIAS VOLTAGES UP TO +50VDC WITH EACH BIAS SUPPLY CURRENT LIMITED AT 100mA. DO NOT TOUCH, CONNECT, OR DISCONNECT THE MEASURED COMPONENT OR THE BNC CABLES WHILE BIAS VOLTAGES ARE APPLIED.

WARNING

TO PREVENT POSSIBLE ELECTRICAL SHOCK OR DAMAGE TO THE INSTRUMENT, CHECK LOCAL ELECTRICAL STANDARDS BEFORE SELECTING A POWER CORD. THE INFORMATION PRESENTED HERE MAY NOT BE CORRECT FOR ALL LOCATIONS WITHIN THE REFERENCED AREAS.

WARNING

TO AVOID PERSONAL INJURY FROM ELECTRIC SHOCK DO NOT REMOVE INSTRUMENT COVERS OR PERFORM ANY MAINTENANCE OTHER THAN DESCRIBED IN THIS MANUAL. INSTALLATION AND MAINTENANCE PROCEDURES DESCRIBED IN THIS MANUAL ARE TO BE PERFORMED BY QUALIFIED SERVICE PERSONNEL ONLY.

WARNING

REMOVAL OF INSTRUMENT COVERS MAY CONSTITUTE AN ELECTRICAL HAZARD AND SHOULD BE ACCOMPLISHED BY QUALIFIED SERVICE PERSONNEL ONLY.

WARNING

TO AVOID ELECTRIC SHOCK FROM DANGEROUSLY HIGH VOLTAGES, USE THE FOLLOWING PROCEDURES ONLY WHEN TROUBLESHOOTING THE ANALOG AND DIGITAL CIRCUITS OF THIS INSTRUMENT. DO NOT USE THIS PROCEDURE TO TROUBLESHOOT THE POWER SUPPLY OR CRT CIRCUITRY.

WARNING

HANDLE THE CRT WITH CARE. ROUGH HANDLING OR SCRATCHING CAN CAUSE THE CRT TO IMPLODE. TO AVOID PERSONAL INJURY FROM IMPLOSION WEAR PROTECTIVE GOGGLES AND CLOTHING WHEN WORKING WITH THE CRT. ONLY WORK WITH THE CRT IF YOU ARE QUALIFIED TO DO SO.

WARNING

DISCONNECT ALL POWER TO THE INSTRUMENT BEFORE REPLACING COMPONENTS. FAILURE TO DO SO MAY RESULT IN ELECTRICAL SHOCK.

WARNING

THE CRT IS CAPABLE OF STORING A HIGH VOLTAGE CHARGE AFTER POWER HAS BEEN REMOVED. TO PREVENT PERSONAL INJURY FROM ELECTRIC SHOCK, USE AN OSHA OR UL APPROVED SHORTING STRAP TO DISCHARGE ALL HIGH VOLTAGE POINTS TO CHASSIS GROUND. THIS PROCEDURE MUST BE PERFORMED BY QUALIFIED PERSONNEL ONLY.

WARNING

TO AVOID ELECTRIC SHOCK FROM DANGEROUSLY HIGH VOLTAGES, USE ONLY INSULATED PLASTIC TRIM TOOLS TO PERFORM THE VIDEO ADJUSTMENTS DESCRIBED BELOW.

CAUTION

BECAUSE OF DIFFERING POWER REQUIREMENTS, INSTRUMENTS SHIPPED OUTSIDE THE UNITED STATES MAY REQUIRE A DIFFERENT POWER CORD CONNECTOR. WHEN PLACING A NEW CONNECTOR ON THE POWER CORD, CARE MUST BE TAKEN TO ASSURE ALL THREE WIRES (E,N,L) ARE CONNECTED PROPERLY. THE GREEN OR GREEN-WITH-YELLOW-STRIPE WIRE IS ALWAYS CONNECTED TO EARTH GROUND (E). THE WHITE OR LIGHT-BLUE WIRE IS CONNECTED TO THE NEUTRAL SIDE OF THE POWER LINE (N). THE BLACK OR BROWN WIRE IS CONNECTED TO THE HIGH SIDE OF THE POWER LINE (L). FIGURE 2-6 ILLUSTRATES THE AVAILABLE POWER CORD CONFIGURATIONS ACCORDING TO COUNTRY WHICH MAY BE USED IN VARIOUS COUNTRIES INCLUDING THE STANDARD POWER CORD FURNISHED WITH THE INSTRUMENT.

CAUTION

WHEN PERFORMING ANY CALIBRATION OR MAINTENANCE OPERATION, DO NOT REMOVE OR REPLACE CIRCUIT CARDS WHILE THE POWER IS TURNED ON. FAILURE TO TURN POWER OFF MAY RESULT IN ELECTRIC SHOCK OR DAMAGE TO THE INSTRUMENT.

AVOID THE USE OF CHEMICAL CLEANING AGENTS WHICH MIGHT DAMAGE THE PLASTICS USED IN THIS UNIT. DO NOT APPLY ANY SOLVENT CONTAINING KETONES, ESTERS, OR HALOGENATED HYDROCARBONS. TO CLEAN, USE ONLY WATER SOLUBLE DETERGENTS, ETHYL, METHYL, OR ISOPROPYL ALCOHOL.

THE BRIGHTNESS CONTROL LOCATED AT THE REAR OF THE INSTRUMENT CAN BE EASILY DISTURBED WHEN WRAPPING THE POWER CORD ON THE REAR FEET. VERIFY THE CORRECT SETTING OF THIS CONTROL BEFORE CONTINUING WITH ADDITIONAL ADJUSTMENTS.

DO NOT USE AN OHMMETER SCALE THAT HAS A HIGH INTERNAL CURRENT. HIGH CURRENTS MAY DAMAGE THE DIODES UNDER TEST.

IF THE INSTRUMENT IS PLACED WITHIN A STRONG MAGNETIC FIELD, THE VIDEO DISPLAY MAY BECOME PERMANENTLY DISTORTED. IF THIS CONDITION OCCURS, DEGAUSSING THE VIDEOBRIDGE CASE IS REQUIRED TO RETURN THE DISPLAY TO NORMAL OPERATION. THIS MUST BE DONE BEFORE CONTINUING WITH ADDITIONAL ADJUSTMENTS.

USE OF ANY OTHER TOOL THAN THE RECOMMENDED HEX HEAD PLASTIC TRIM TOOL MAY RESULT IN ELECTRICAL SHOCK OR DAMAGE TO THE TUNING SLUG.

DO NOT ATTEMPT TO LOAD OBJECT CODE TAPES USING 13 CODE. THE INSTRUMENT WILL BECOME "HUNG UP" AND MUST HAVE POWER SHUT OFF TO RESET. THIS CAN CAUSE LOSS OF DATA.

DO NOT USE NEGATIVE TEST CODES IF NOT LISTED. ILLEGAL ENTRIES MAY CAUSE INSTRUMENT MALFUNCTION ALONG WITH LOST OR ALTERED DATA. IF THE VIDEOBRIDGE BECOMES "HUNG UP", POWER MUST BE SHUT OFF TO RESET.

CAUTION

FORMATTING A TAPE DESTROYS ANY AND ALL DATA WHICH MAY HAVE BEEN PREVIOUSLY SAVED ON THE TAPE.

CAUTION

DO NOT ENTER TEST CODE 6 OR TEST CODE -6 WITHOUT ZRAM OPTION INSTALLED.

S.4 LOCATION OF WARNING LABELS APPEARING ON THE INSTRUMENT

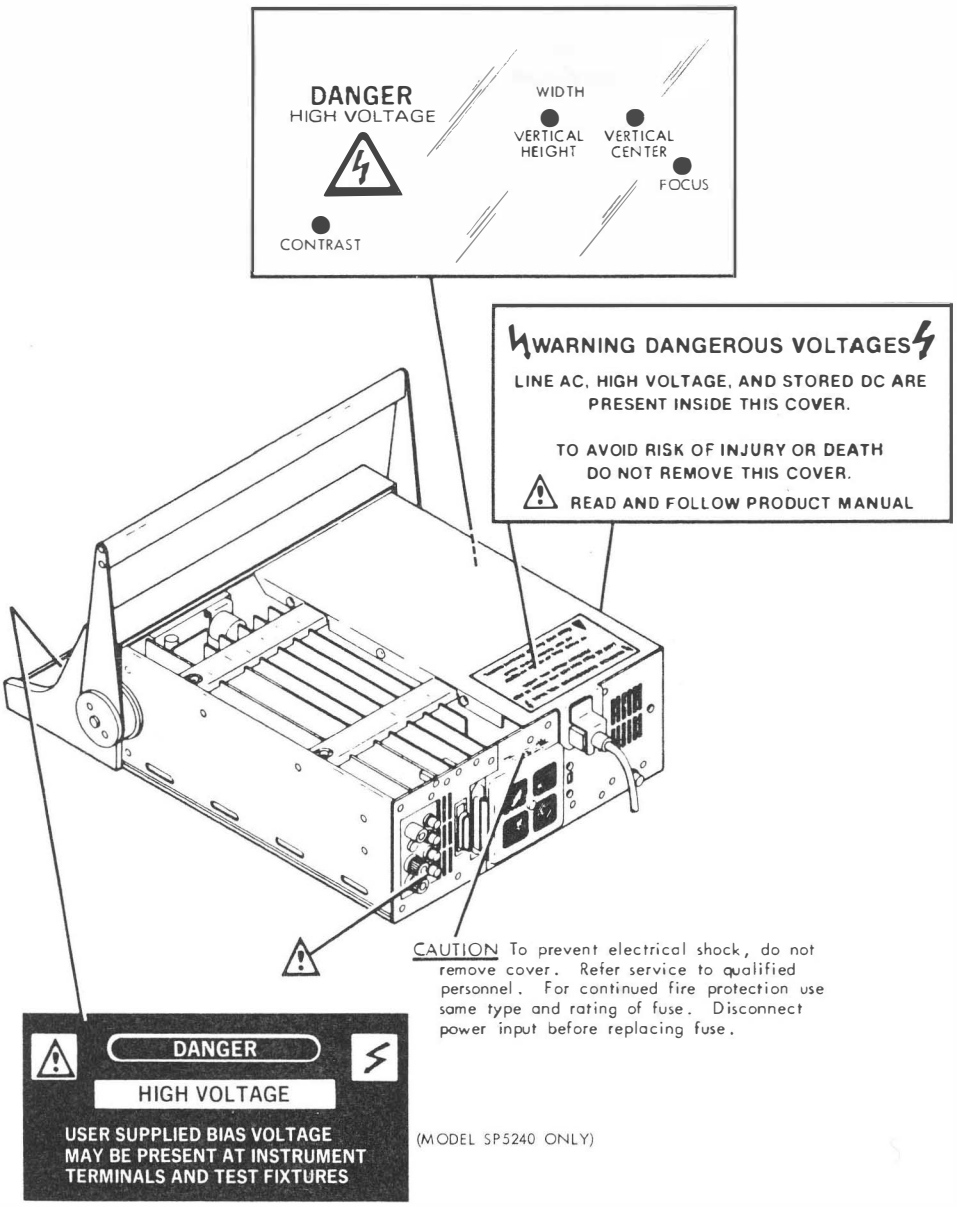

Figure S-1. Warning Label Locations

SECTION 1
DESCRIPTION

1.1 INTRODUCTION

ESI's Model 2150 and Model 2160 Auto LRC Meters are two extremely versatile impedance measuring instruments. They feature variable test frequencies up to 150kHz, programmable test-signal levels, component sorting, and CRT displays. They measure inductors (L), resistors (R), capacitors (C), and display up to 16 impedance characteristics.

The 2150/2160 LRC meter is basically composed of a frequency selectable sinewave generator, a test-level regulator, precision range resistors, a phase-sensitive voltmeter, and a charge balancing analog-to-digital converter. All measurements, calculations, and displays are under the control of the 2150/2160's Z80 microprocessor.

> **NOTE:** Due to the extended frequency capabilities of the 2150/2160, measurements above 10kHz (1kHz for capacitors) are sensitive to the position of test connections. We strongly recommend that you familiarize yourself with the sections in this manual concerning Connections to the Unknown and Test Leads vs. Test Fixtures (Sections 2.3.3 and 2.3.4). We hope this will help you improve measurement reliability and utilize your VideoBridge more productively.

All functions, procedures, and specifications listed in this manual assume a minimum of 10 minutes warm-up time.

The 2150/2160 also offers a wide variety of test conditions:

- Test frequencies -- from 20Hz to 150kHz, 3023 total. (Section 2.5.1)

- Test signal levels -- from 5mV to 1500mV or from 0.1mA to 100mA. (Section 2.5.2)

- Preset Measurement Parameters -- choose from 3 preset combinations of settling time, integration time, and number of measurements averaged. Programmed for FAST, MEDIUM, or SLOW operation, you can select these combinations or enter your own. (Section 2.8.1)

- Settling times -- from 2ms to 1500ms (in 1ms steps). (Section 2.8.3)

- Integration times -- from 2ms to 600ms. (Section 2.8.2)

- Measurement averages -- select from 1 to 20 measurements to be averaged. (Section 2.8.4)

Special measurement features built into the instruments include:

- Zero calibration -- The 2150/2160 performs zero calibration to measure and correct offsets for different settings of the test conditions mentioned above. The offset corrections for as many as four combinations of these settings are stored in memory. Each offset correction is recalled whenever the corresponding combination of settings is re-entered. This saves you the time of re-calibrating.(Section 2.3.5)

- Display test level -- to the unknown. The actual test level supplied may vary from the programmed value because of mismatches that might occur when attempting to use constant voltage on a low impedance device or constant current on a high impedance device. (Section 2.5.2)

Sorting operations offer unique features both in ease of operation and diagnosing setup problems. These include:

- Deviation -- from a nominal value is displayed in either absolute or percentage terms. (Section 2.6)

- Component sorting -- characterizes components into 11 tolerance categories, a major reject, or a minor reject while counting the number of components that fall into each category. (Section 2.7)

- PASS/FAIL test -- indicators are displayed on the CRT for hand operated GO/NO-GO testing. (Section 2.7)

Mass storage for test parameter setups and measurement results is the feature that sets the Model 2160 apart from the Model 2150. The 2160 has a cassette tape deck that uses mini-cassette tapes for storing and reloading test parameter programs along with STAT and ANALOG applications programs. Cassette features include:

- Directory -- of all files on a tape
- Alphanumeric -- character entry for file names
- Autostart -- feature loads and executes a file automatically when instrument power is applied.

(For more information, refer to Section 2.9 Cassette Tape Loader.)

Communication interfacing -- the transfer of meaningful information between instrument and operator is the reason for the cathode-ray tube (CRT) display. The 5-inch CRT provides different measurement information utilizing two display formats:

1 -- In the direct display format, the CRT provides large easy-to-read alphanumeric characters to highlight up to 6 digits of measurement information, and small alphanumeric characters to display the settings for frequency, nominal value, measurement mode, test signal level, settling time, integration time, and number of measurements averaged.

2 -- In the status display format, the instrument simultaneously displays + and - limits for all component tolerance bins, and their component counters capable of up to 65535 counts for each bin.

NOTE: In the direct display format, some measurement values may contain half-sized zeroes. These appear to the right of the last significant digit due to factors affecting resolution. For example, when a D factor of .00012 is displayed in parts per million, it becomes 12o ppm-D).

One to six digits of measurement information can be displayed on the CRT. The number of digits displayed is related to the resolution contained in the A/D conversion process. More commonly, the number of digits displayed depends upon selectable factors such as measurement speed, test frequency, and impedance range. Of these, measurement speed has the greatest effect on number of digits displayed: more digits require more time.

A special test mode (27 CODE) allows display of more digits at faster speeds if desired. However, these expanded readings may not improve true measurement resolution due to actual signal-to-noise ratios.

The Model 2150/2160 offers maximum flexibility with a wide range of options. Many options are field installable and are designed to tailor instrument operation to specific testing requirements. They operate as stand-alone benchtop testers or can be used with auxiliary handling equipment to fit easily into sophisticated automatic testing systems.

> **NOTE:** The RS-232C Interface capability comes standard on the Model 2160 VideoBridge and is located on the same board as the cassette control circuitry. Since the Model 2150 VideoBridge has no cassette control circuit, the RS-232C Interface is available as a field installable option kit, P/N 46724.
>
> RS-232C Interface circuit operation is the same for each model, however and is described in Section A.2.

(BLANK)

1.2 SPECIFICATIONS

1.2.1 Electrical Specifications

Measurement Functions:

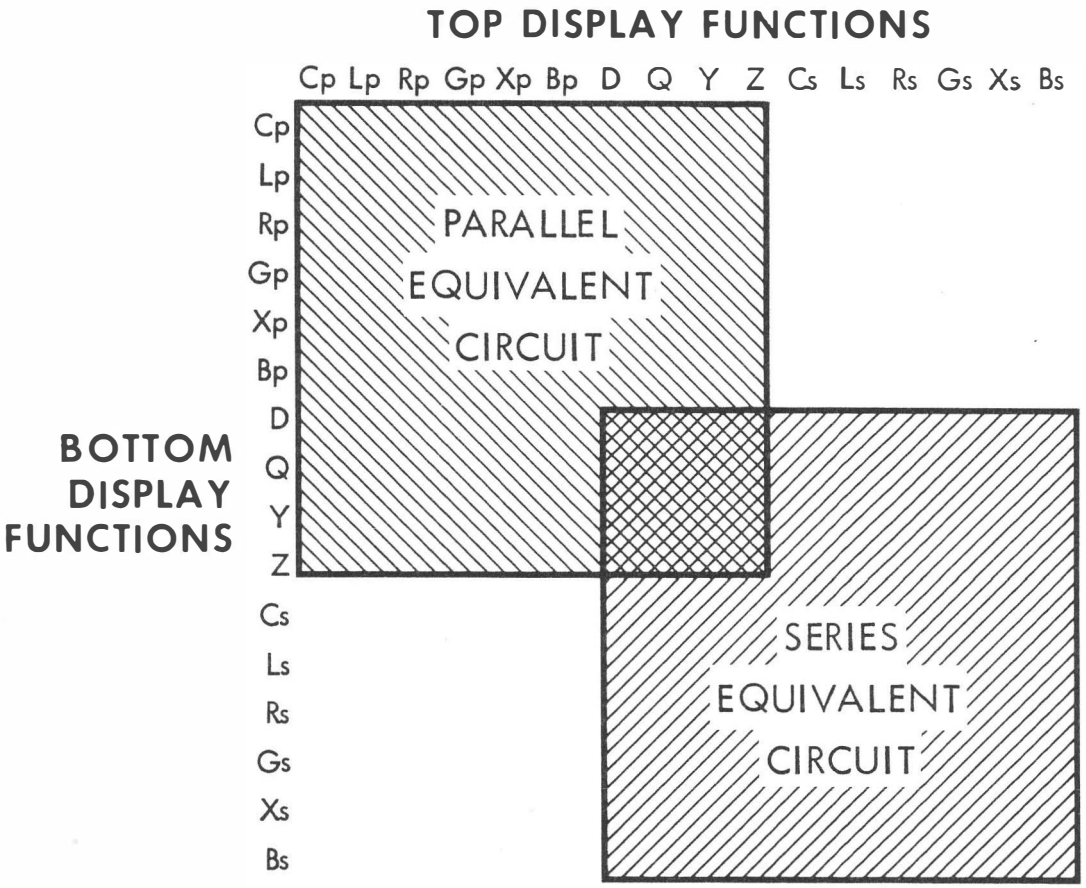

NOTE: Any top display can be displayed with any bottom display within the shaded areas.

Display Characteristics: 5-inch CRT, direct and status formats, interchangeable positioning of major and minor functions, 2 sizes of alphanumeric characters.

Table 1-1. Capacitance Measurement Accuracy

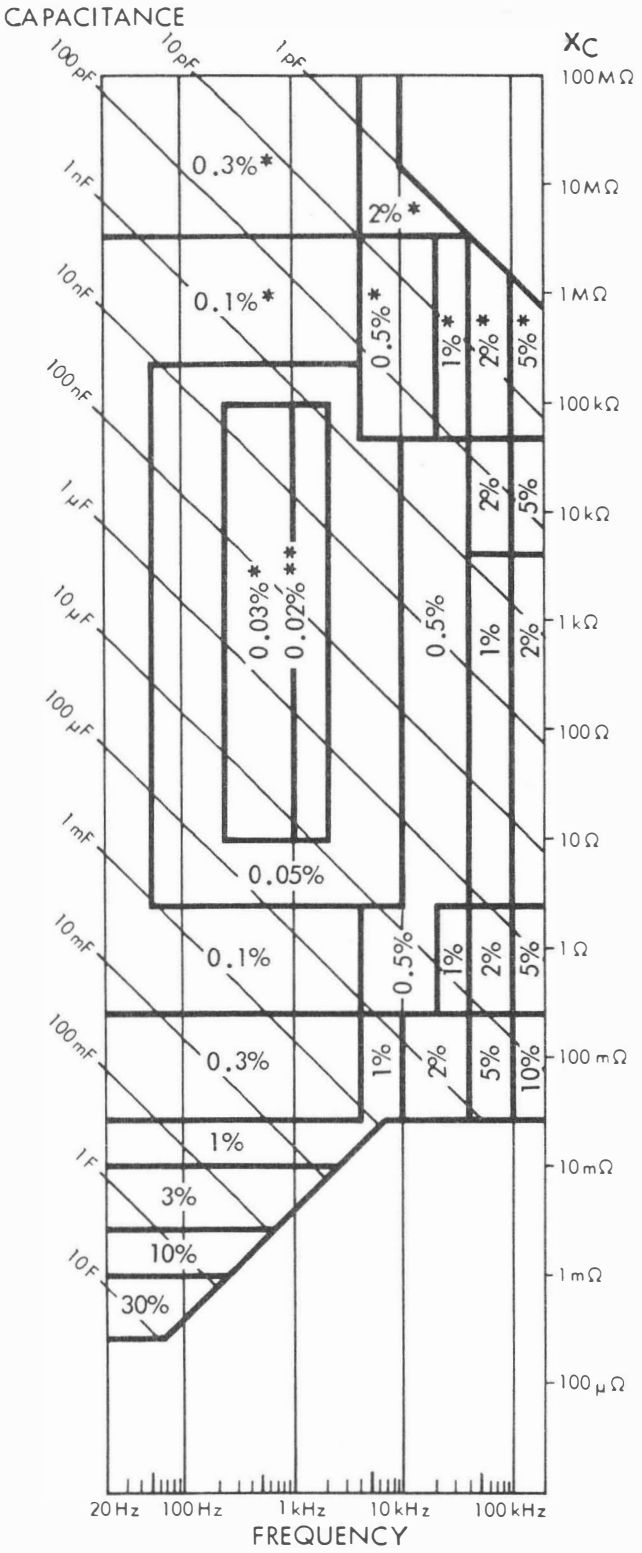

$$* + \left(\frac{0.01\text{pF}}{f(\text{kHz})} + 0.01\text{pF} \right)$$

**0.02% at 1 kHz from Approximately 1 nF to 10 µF

If $D > 1$, add $\left[0.05\% \left(1 + 0.3D^2\right)\right]$ to accuracies shown

TEST CONDITIONS:

Level	-1000 mV/100 mA
Speed	-Medium †
Range	-Auto
Bias	-Off
Zero	-Calibrated
Connections	-Fully Shielded ††

V_{test} = 800 mV to 1500 mV
I_{test} = 50 mA to 100 mA

For V_{test} <800 mV Multiply Basic Accuracy by $\left(1 + \frac{300}{\text{mV}}\right)\left(1 + \frac{\text{kHz}}{10}\right)$

For I_{test} <50 mA ($Z > 16\Omega$)
Multiply Basic Accuracy by $\left(1 + \frac{300}{\text{mA} \times Z(\Omega)}\right)$

For I_{test} <50 mA ($Z \leq 16\Omega$)
Multiply Basic Accuracy by $\left(1 + \frac{30}{\text{mA}}\right)$

† Accuracy specification applies to Medium and Slow Speed. If Fast Speed, add 0.05% to accuracies shown.

†† Properly shielded test leads and connections to the unknown are required to achieve specified accuracy.

Table 1-2. Inductance Measurement Accuracy

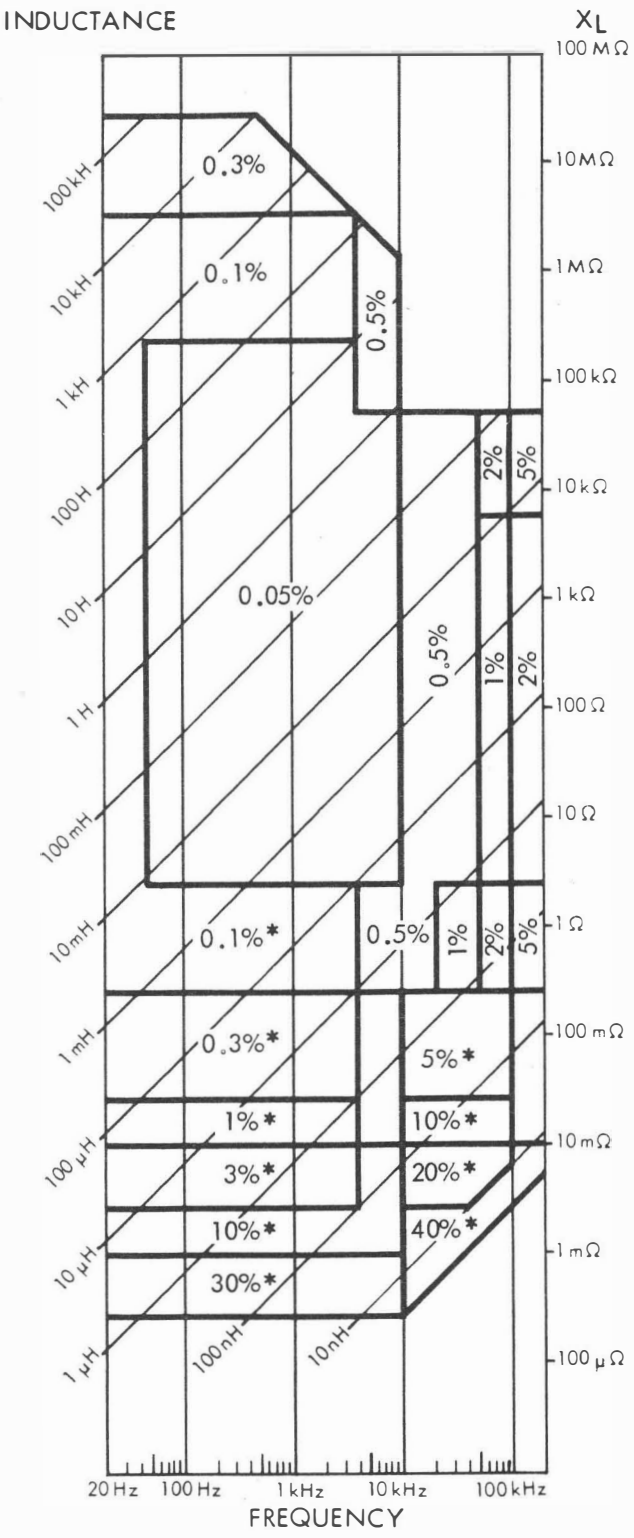

$$* + \left(\frac{0.01\mu H}{f(kHz)} + 0.01\mu H\right)$$

If D > 1, add $\left[0.1\%\ (1+0.3D^2)\right]$ to accuracies shown

TEST CONDITIONS:

Level	-1000 mV/100 mA
Speed	-Medium†
Range	-Auto
Bias	-Off
Zero	-Calibrated
Connections	-Fully Shielded††

V_{test} = 800 mV to 1500 mV
I_{test} = 50 mA to 100 mA

For V_{test} <800 mV Multiply Basic Accuracy by $\left(1 + \frac{300}{mV}\right)\left(1 + \frac{kHz}{10}\right)$

For I_{test} <50 mA (Z > 16Ω)
Multiply Basic Accuracy by $\left(1 + \frac{300}{mA \times Z(\Omega)}\right)$

For I_{test} <50 mA (Z ≤ 16Ω)
Multiply Basic Accuracy by $\left(1 + \frac{30}{mA}\right)$

† Accuracy specification applies to Medium and Slow Speed. If Fast Speed, add 0.05% to accuracies shown.

†† Properly shielded test leads and connections to the unknown are required to achieve specified accuracy.

Table 1-3. Resistance/Conductance Measurement Accuracy

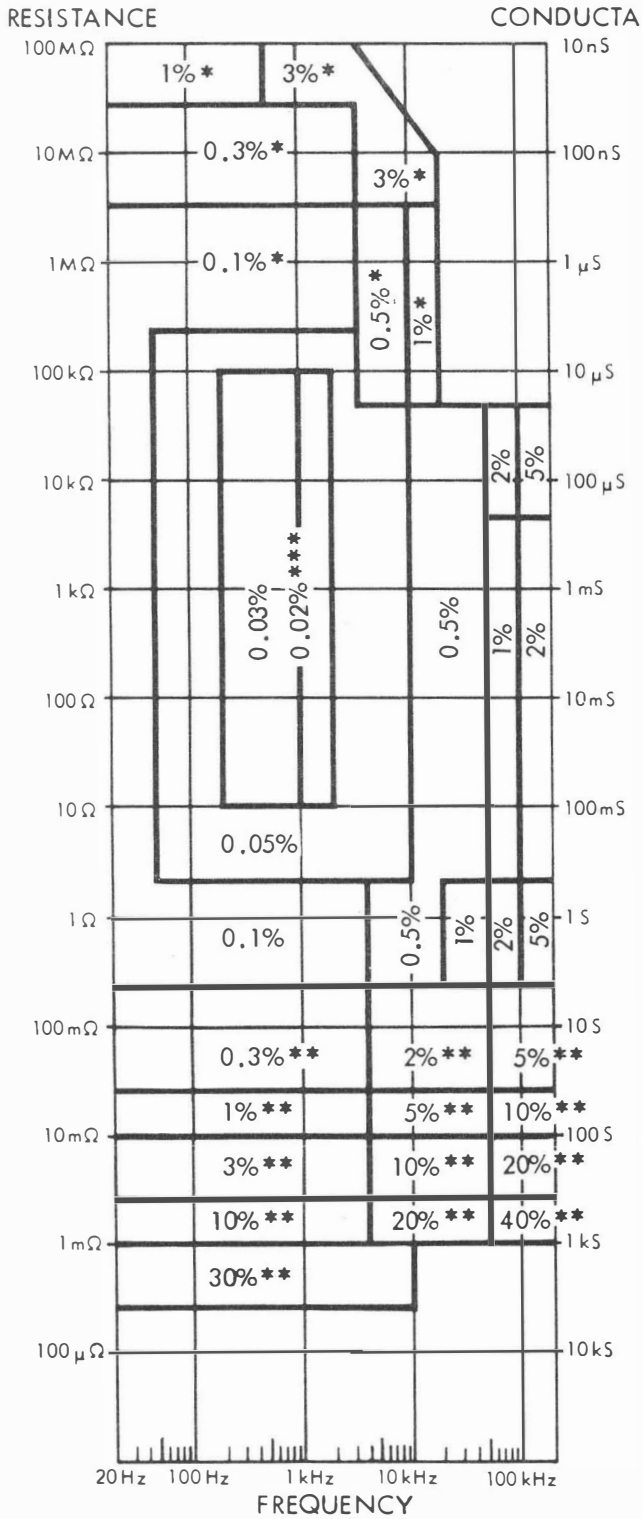

$*+\left[0.1\,nS \times f(kHz) + 0.5\,nS\right]$

$**+\left[0.01\,m\Omega \times f(kHz) + 0.1\,m\Omega\right]$

*** 0.02% at 1kHz for 10Ω to 100kΩ

If $Q > 1$, add $\left[0.1\%\ (1+0.3Q^2)\right]$ to accuracies shown

TEST CONDITIONS:

Level	-1000mV/100mA
Speed	-Medium †
Range	-Auto
Bias	-Off
Zero	-Calibrated
Connections	-Fully Shielded ††

V_{test} = 800mV to 1500mV
I_{test} = 50mA to 100mA

For V_{test} <800mV Multiply Basic Accuracy by $\left(1 + \frac{300}{mV}\right)\left(1 + \frac{kHz}{10}\right)$

For I_{test} <50mA ($Z > 16\Omega$)
Multiply Basic Accuracy by $\left(1 + \frac{300}{mA \times Z(\Omega)}\right)$

For I_{test} <50mA ($Z \leq 16\Omega$)
Multiply Basic Accuracy by $\left(1 + \frac{30}{mA}\right)$

† Accuracy specification applies to Medium and Slow Speed. If Fast Speed, add 0.05% to accuracies shown.

†† Properly shielded test leads and connections to the unknown are required to achieve specified accuracy.

Table 1-4. Impedance Ranges vs.

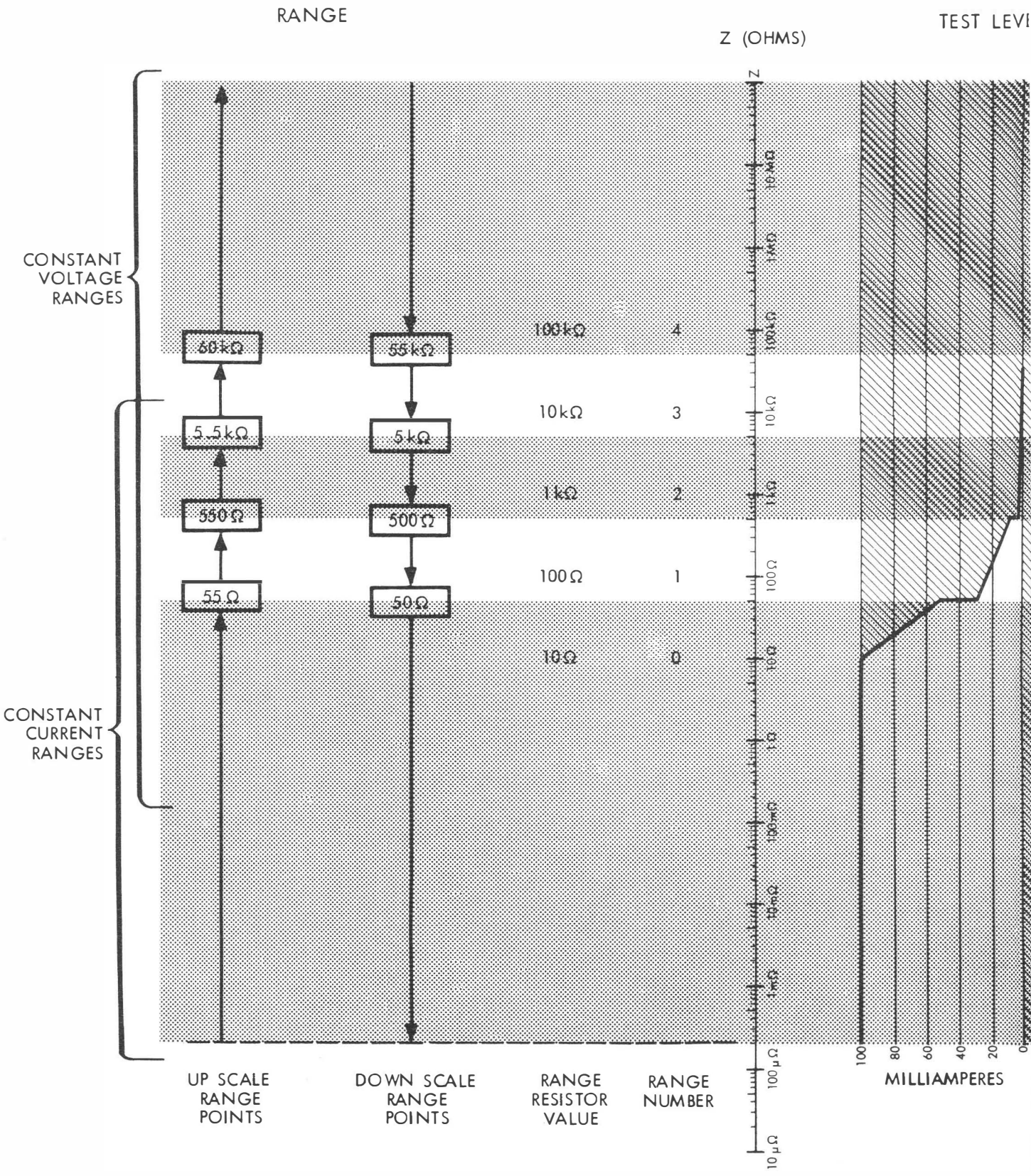

s. Test Signal Level (typical at 1kHz)

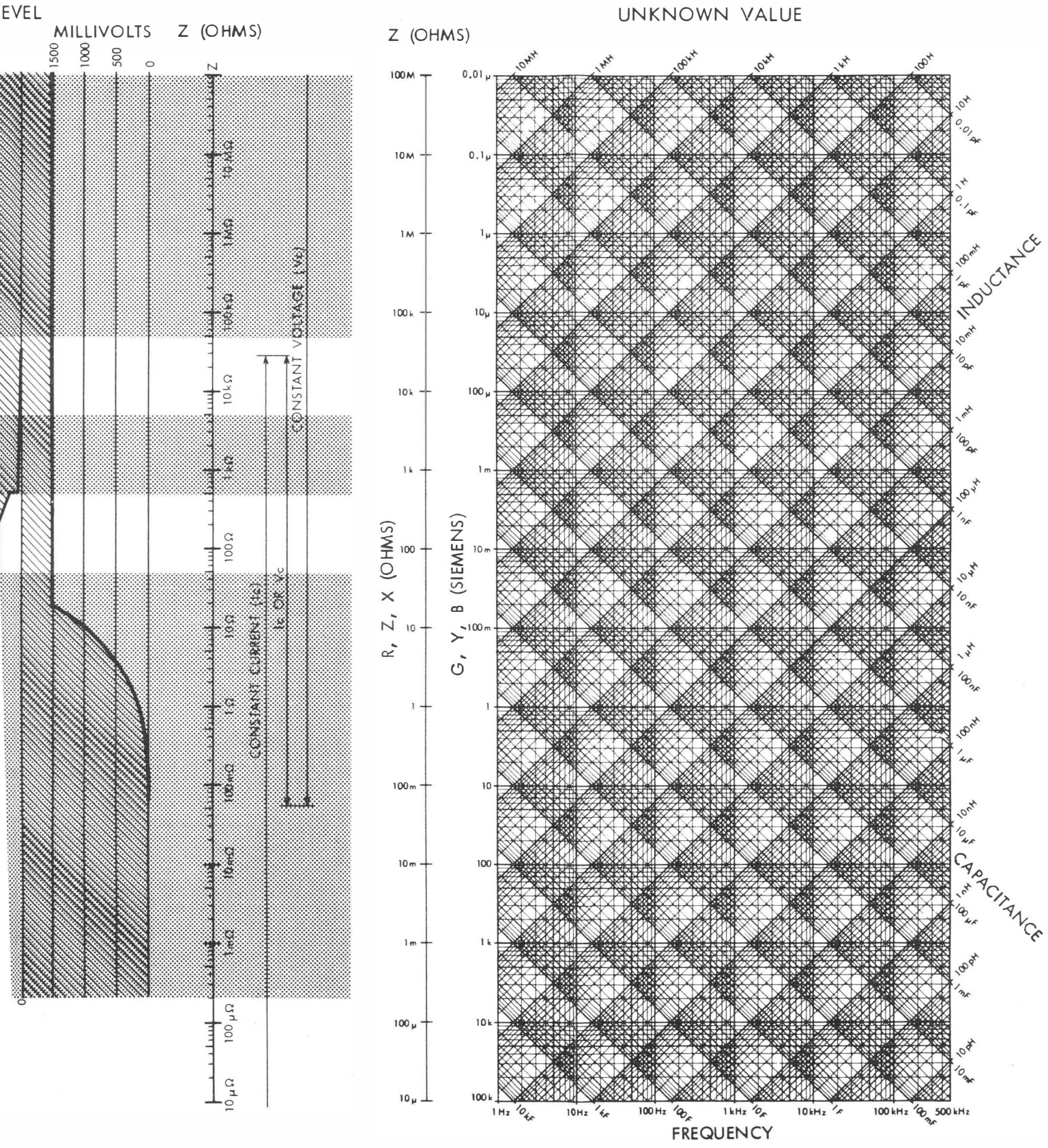

BASIC D ACCURACY

Capacitance (Medium, Slow speed): $+/- 0.00025(1+D^2)$*

Inductance (Medium, Slow speed): $+/- 0.00035(1+D^2)$*

Capacitance (Fast speed): $+/- 0.0005(1+D^2)$*

Inductance (Fast speed): $+/- 0.0005(1+D^2)$*

BASIC Q ACCURACY

All Components (Medium, Slow speed): $+/- 0.035 \left[Q + \left(\frac{1}{Q}\right)\right]\%$*

All Components (Fast speed): $+/- 0.05 \left[Q + \left(\frac{1}{Q}\right)\right]\%$*

---

*Correction Factors

For HI Z ($Z \geq 10M\Omega$) add $0.0005 \left(\frac{Z \text{ (in } M\Omega)}{10M\Omega}\right)$ to basic D or Q accuracy

For LO Z ($Z \leq 1\Omega$) add $0.0005 \left(\frac{1\Omega}{Z \text{ (in}\Omega)}\right)$ to basic D or Q accuracy

For Frequencies < 200Hz multiply basic D or Q accuracy

$$\text{by } \left(1 + \frac{60}{F_{test} \text{ in Hz}}\right)$$

For Frequencies > 1000Hz and $\leq$ 10kHz multiply basic D or Q accuracy

$$\text{by } \left(1 + \frac{F_{test} \text{ in Hz}}{3000}\right)$$

For Frequencies > 10kHz multiply basic D or Q accuracy

$$\text{by } \left(1 + \frac{F_{test} \text{ in kHz}}{3}\right)\left(1 + \frac{Z \text{ in k}\Omega}{100k\Omega}\right)$$

For V_{test} < 800mV multiply basic D or Q accuracy

$$\text{by } \left(1 + \frac{300}{V_{test} \text{ (in mV)}}\right)$$

For $I_{test} \leq$ 100mA multiply basic D or Q accuracy

$$\text{by } \left(1 + \frac{300}{I_{test} \text{ (in mA)} \times Z \text{ (in } \Omega)}\right)$$

100kHZ D ACCURACY

Capacitance; Ranges 0-2 ($\geq$ 319pF); Medium, Slow speed:
$+/-0.003(1+D^2)$
Capacitance; Ranges 0-2 ($\geq$ 319pF); Fast speed:
$+/- 0.005(1+D^2)$

Capacitance; Range 3 ($<$ 319pF); Medium, Slow speed:
$+/- 0.008(1+D^2)$*
Capacitance; Range 3 ($<$ 319pF); Fast speed:
$+/- 0.01(1+D^2)$*

100kHZ ESR ACCURACY

ESR accuracy (at 100kHz) = [D accuracy (at 100kHz) x Xs_{unk}] + 1.0mΩ

---

* 100kHz D Correction Factor

If C_{unk} < 30pF, multiply 100kHz accuracy by $1 + \frac{30pF}{C_{unk}}$

TEST SIGNALS

Frequency:	3023 programmable steps between 20Hz and 150kHz. $f = 60kHz/N_1$ Where: N_1 is an integer $1 \leq N_1 \leq 3000$ OR $f = 300kHz/N_2$ Where: N_2 is an integer $2 \leq N_2 < 30$
Accuracy:	+/- 0.01%
Level Set	
Voltage Level:	5mV to 1500mV RMS in 1mV steps
Accuracy:	+/- (4% of set value + 2mV)
Current Level:	0.1mA to 100mA RMS in 0.1mA steps
Accuracy:	+/- [4% of set value + (2/R)mA] where R = value of the range resistor (in ohms) for range of measured part ($10 \leq R \leq 10,000$).

EXTERNAL VOLTAGE BIAS

Voltage:	+50VDC maximum (+200V optional)
Fuse:	0.5A, 250V, 3AG Fast Blow

LOADS TO GUARD

Total load impedance (Z) to the guard point must be greater than or equal to the impedance of the device under test.

INPUT PROTECTION

The 2150/2160 input terminals have a circuit which prevents damage to the instrument if a charged capacitor is connected to these terminals. Protection limits can be calculated from the equation:

$$V_{MAX} = \sqrt{\frac{2}{C}} \qquad C_{MAX} = \frac{2}{V^2}$$

Where V = capacitor voltage in volts
C = capacitor value in farads

The protection circuit allows a maximum energy of 1 joule up to a maximum voltage of 1kV. Table 1-5 below gives examples of maximum voltages for various capacitance values.

Table 1-5. Input Protection Limits

1kV	0 to 2uF
315V	20uF
100V	200uF
31V	2mF
10V	20mF
3V	200mF
1V	2F

When limits are exceeded (above 100V), the fuse on the rear panel will burn out and must be replaced with a 0.5A 3AG Fast Blow fuse. TO PREVENT POSSIBLE DAMAGE TO THE INSTRUMENT, USE ONLY THE PROPER REPLACEMENT FUSE.

MEASUREMENT SPEED

NOTE: To determine overall Measurement Speed, test conditions must be specified (e.g. test frequency, test signal level, value of component, etc.). Display mode, measurement mode and external devices also affect measurement speed. For a detailed description on calculating measurement speed, see Section 2.8.

NOTE: Three preset combinations of Integration Time, Settling Time, and Measurement Averages are available. The FAST, MEDium, and SLOW keys provide quick, convenient selection of these combinations. Approximate speeds for these combinations under some typical modes of operation are listed.

NOTE: The following speeds are for the following test conditions: test frequency -- 1kHz, test signal level -- 1000mV, value of component-under-test -- 1nF, measurement mode -- Continuous (except where noted) ranging status -- RANGE HOLD.

	SETL	I.T.	AVG
Fast	5ms	10ms	1
Medium	50ms	50ms	1
Slow	50ms	50ms	10

	DIRECT	SORT and GO/NO-GO	HANDLER*
FAST	~4 measurements/second	~11 measurements/second	~6/second ~9/second **
MEDIUM	~2 measurements/second	~2 measurements/second	~2 measurements/second
SLOW	~5 seconds/measurement	~5 seconds/measurement	~5 seconds/measurement

*Single mode only, 8 CODE enabled
**2ms SETL, 2ms I.T., frequency ≥500Hz

NOTE: For remote GPIB measurements, add 350ms per measurement for FAST and SLOW, 400ms for MEDium.

1.2.2 Environmental Specifications

HUMIDITY

Operating:	20% to 80% Relative
Storage:	0% to 90% Non-Condensing

TEMPERATURE

Operating:	10°C to 45°C (50°F to 113°F)
Storage:	-40°C to 71.1°C (-40°F to 160°F)

1.2.3 General Specifications

POWER REQUIREMENTS

Line power:	90-132VAC (115 nominal) 48/66Hz 180-250VAC (230 nominal) 48/66Hz
Powerline Fuse:	2A, 250V Slow Blow (3AG) for 115VAC 1.6A, 250V Slow Blow (5 x 20mm) for 230VAC
Power Consumption:	100W maximum

DIMENSIONS

Height:	144mm (5.7 in.) with feet
Width:	384mm (15.1 in.) with handle
Length:	559mm (22 in.) with handle
Weight:	14.5kg (32 lb)

1.2.4 Cassette Specifications (2160 Only)

Tape Cassette Type:	Braemar Computer Devices Type CMC-50 (50ft long)
File Storage Information:	All displayed measurement parameters, binning limits, and bin counter information; also, test conditions, alpha-numeric file names, and nominal values
Storage Capacity:	2 sides per tape, each side with the following specifications: 80 blocks per 50 foot side 256 bytes per block 6 blocks per file (mimimum) 13 file entries per side (this is a maximum number and may be decreased by large files)

1.3 OPTIONS AND ACCESSORIES

1.3.1 Accessories (must be ordered separately unless indicated)

	ESI Part No.
Model 2001 Sorting Fixture, 4-terminal (requires 4 five-foot BNC-to-BNC cables)	32001
Model 2003 Sorting Fixture, 4-terminal (requires 4 five-foot BNC-to-BNC cables)	32003
Model 2004 Zero Insertion Force Sorting Fixture, 4-Terminal (requires 4 five-foot BNC-to-BNC cables)	32004
Model 2005 Chip Tweezers, 4-Terminal (for chip components)	32005
BNC-to-BNC Cable Assembly (five foot length, set of 4)	53155
BNC to KELVIN KLIPS® cable assembly (shipped with all Model 2150's and 2160's)	47454
Alpha Character Keyboard Overlay (shipped with all Model 2160's)	55413
Statistics Application Software Kit (available for 2160 only)	55104
Analog Application Software Kit (available for 2160 only)	55103
Cassette Tape, blank and formatted (2160 only)	55852

1.3.2 Options (factory installed only)

	ESI Part No.
Non-Volatile Memory ZRAM	55843
+200V DC Bias capability	SP5240

NOTE: Contact your ESI sales representative for details on upgrading instruments purchased without factory options.

1.3.3 Options (field installable)

	ESI Part No.
General Purpose Interface Bus (IEEE-488)	46725
RS-232C Interface (2150 only)	46724
Handler Interface Options*	
1. "General" -- For interfacing to Engineered Automation, Q Corporation, Ismeca, Systemation, Heller, and other handlers	47895
2. "Daymarc" -- For interfacing to Daymarc Type 147 and 149 handlers	47896
3. "MCT Browne" -- For interfacing to MCT Browne handlers	47897

NOTE: Model 2160 can take only one of the following field installable options: GPIB or Handler Interface. Model 2150 can take only two of the following options: RS-232C, GPIB or Handler Interface.

*Consult factory for interface to other handlers

SECTION 2
OPERATION

2.1 FRONT PANEL CONTROLS AND INDICATORS

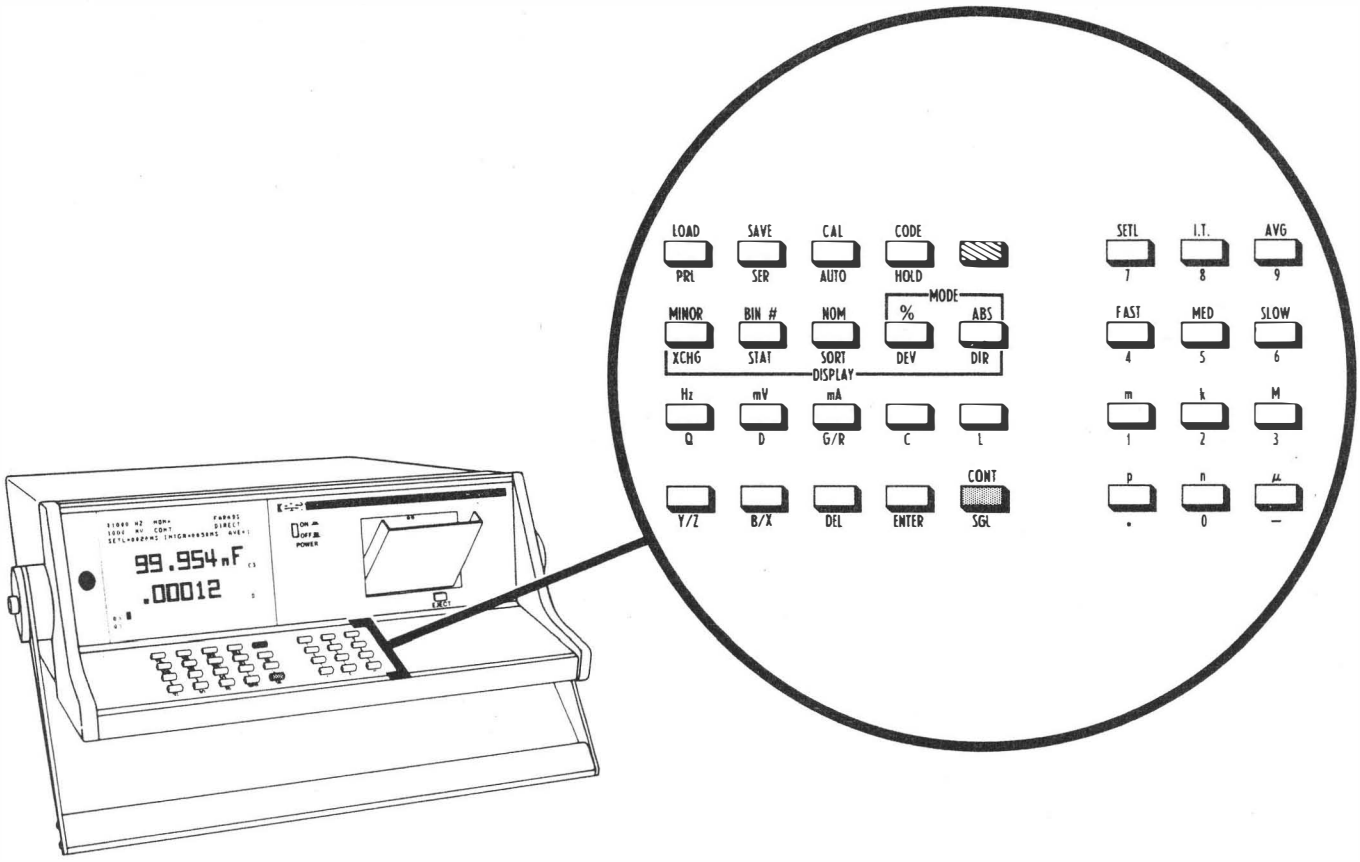

Figure 2-1. Model 2160 Front Panel

2.1.1 Keyboard and Key Definitions

The Model 2150/2160 keyboard has 32 keys to control all instrument operations. Many of the keys have labels for more than one function. The functions labeled in white are selected by pushing the key directly above it. Alternate functions, labeled in blue, are selected by pushing the blue key followed by the key directly below the desired function. The following list defines each key function.

Measurement Controls

Single measurement mode key makes one measurement and holds the displayed result. The BIN counter is updated for each measurement made (regardless of operational mode selected).

Continuous measurement mode key automatically starts a new measurement as soon as the present measurement is finished. BIN counters are not updated.

Series equivalent circuit key, in conjunction with the measurement function, selects the equivalent circuit element of the unknown component to be measured.

Parallel equivalent circuit key, in conjunction with the measurement function, selects the equivalent circuit element of the unknown component to be measured.

Zero correction key. Stores L, R, C, and G zero correction values to compensate for test fixture reactance (L and C) and loss (R and G) components. Prompts user to close and open test fixture for 5 range calibration process.

Range Hold key allows rapid checking of many components in the same range.

Measurement Controls (cont)

Auto key returns unit to autoranging mode. Autoranging is automatically selected when the instrument is first turned on.

Upper function key selects functions labeled in blue.

DISPLAY CONTROLS

Exchange key interchanges the top measurement display function with the bottom display function. One exchange takes place for each push of the key.

Status key toggles the display between binning (status) display format and the previous format. The display format changes once for each push of the key.

Sort key enters the instrument into the component sorting mode. Display indicates bin number or bin R (for reject) for each component measured. The Bin Counter is activated only in the SINGLE measurement mode.

Display Controls (cont)

Deviation (display) key enters the deviation measurement mode. After a nominal value is set, the top measurement display will indicate absolute or percent deviation from the nominal value.

Direct (display) key puts the instrument into normal (direct) display operation. Takes display out of: Auto LRC, GO/NO-GO, Deviation, and Status modes.

Delete key erases the last character entered; does not affect previously entered data.

Impedance Functions

Quality Factor key selects the Q measurement function as the bottom display function.

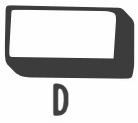

Dissipation factor key selects D measurement function as the bottom display function.

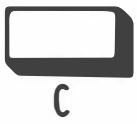

Capacitance function key selects F (farads -- units of capacitance) as the top display function.

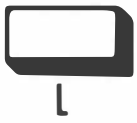

Inductance function key selects H (henrys -- units of inductance) as the top display function.

Conductance(G) / Resistance(R) function key selects S (siemens -- units of conductance) or Ω (ohms -- units of resistance) as the bottom display function. R_s is normally displayed in the series equivalent circuit mode, and R_p is displayed in parallel equivalent circuit mode. G_s can be selected by pressing the G/R key a second time while in series circuit mode. G_p can be selected by pressing the G/R key a second time while in parallel circuit mode.

Admittance(Y) / Impedance(Z) function key selects either S (siemens -- units of admittance) or Ω (ohms -- units of impedance) as the top display function. Z is normally displayed in series and parallel equivalent circuit modes. Y is displayed in either mode by pressing the Y/Z key a second time.

Susceptance(B) / Reactance(X) function key selects either S (siemens -- units of susceptance) or Ω (ohms -- units of reactance) as the top display function. X_s is normally displayed in series equivalent circuit mode, and X_p is displayed in parallel equivalent circuit mode. B_s is displayed by pressing the B/X key a second time in series mode, while B_p is selected by pressing B/X a second time in parallel circuit mode.

Cassette Functions (2160 Only)

Load function key re-programs the instrument with measurement parameters stored on the cassette tape.

Save function key stores the instrument's parameters on the cassette tape.

Deviation and Limits Functions (a = numerical argument precedes key)

(a)**Bin number key** selects the bin for which limit values will be entered.

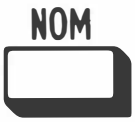

(a)**Nominal value key** is used to enter a comparison value for deviation or sorting measurements. Entering a nominal value resets all bin counts to zero (see Section 2.6.1 for more information).

(a)**Minor limit key** is used to enter a maximum or minimum reject limit for the secondary function when programming limits for the sorting mode. For Q and siemen values, the entry will be a minimum limit. Entries for D and ESR will be maximum limits.

Enter key is used as a space bar.

Deviations and Limits Functions (cont)

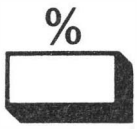

Percent mode key is used 1) to select percent DEViation display to show deviations from the nominal value, 2) to change STATUS page to set limits in percent.

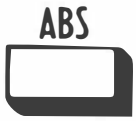

Absolute mode key is used 1) to select absolute DEViation display to show deviations from the nominal value, 2) to allow limits on STATUS page to be set as absolute values.

Test Frequency and Level (a = numerical argument precedes key)

(a)**Frequency key** enters a desired test frequency in hertz (Hz). Available frequencies below 10kHz are found by $F = 60kHz/N_1$ Where: N_1 is an integer $1 \leq N_1 \leq 3000$. Frequencies above 10kHz are found by $F = 300kHz/N_2$ Where: N_2 is an integer $2 \leq N_2 \leq 30$. See Section 2.5.1 for more details concerning test frequencies.

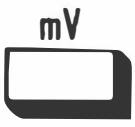

(a)**Test voltage level key** enters a test voltage from 5mV to 1500mV in 1mV steps.

(a)**Test current level key** enters a test current from 0.1mA to 100mA in 0.1mA steps.

Measurement Time (a = numerical argument precedes key)

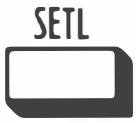

(a)**Settling time key** enters a time in milliseconds. After initiating a measurement, the instrument waits the selected time then starts the measurement. Settling times from 2ms to 1500ms can be entered in 1ms steps.

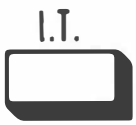

(a)**Integration time key** enters a time in milliseconds. This determines the number of test cycles performed on the device-under-test. Short integration times are less accurate than longer times and allow less measurement resolution. Integration times range from 2ms to 600ms (see Section 2.8.2 for more information.)

(a)**Average measurements key** enters the number of measurements (1 to 20) to be averaged for the result displayed.

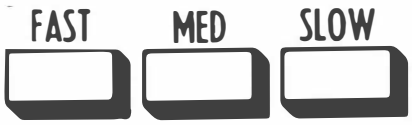

Fast, Medium, Slow keys choose preselected values of Settling Time, Integration Time, and number of measurements averaged.

	SETL	I.T.	AVG
Fast	5ms	10ms	1
Medium	50ms	50ms	1
Slow	50ms	50ms	10

NOTE: Overall measurement speed is also dependent upon such factors as test frequency and display mode. See Section 2.8 for a complete description of measurement speed calculation.

Numerical and Unit Multiplier Keys

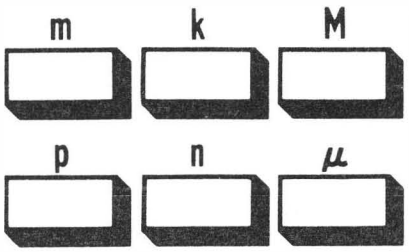

Multiplier prefix keys modify the basic units programmed. m = milli, k = kilo, M = mega, p = pico, n = nano, and u = micro.

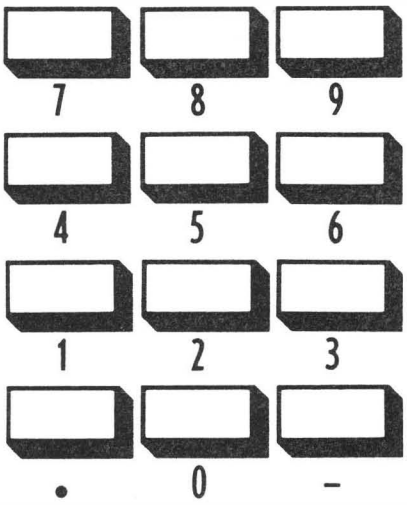

Number keys are for keyboard entry of desired numerical arguments or data into the instrument.

Test Code Selection (a = numerical argument precedes key)

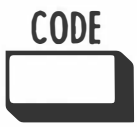

(a)**Code key** enables special functions not directly available on the VideoBridge keyboard. Pressing <blue> <CODE> displays the list of test code numbers and names on the CRT.

2.1.1.1 Test Codes

Test codes provide a means by which additional functions, not available directly on the keyboard, can be entered to further enhance the operation of the VideoBridge. Table 2-1 lists these functions and their programming codes. The procedure for programming the test code functions is as follows:

STEP 1. Push the number key or keys representing the desired function from the list in Table 2-1 (for negative test codes, press the minus sign, <->, before pressing the number key.)

STEP 2. Push the blue key.

STEP 3. Push the CODE key.

Example: Turn ON Bias (test code 1)

Push

Table 2-1 is a list of these functions. All test codes apply to both the Model 2150 and Model 2160 unless otherwise stated. Numbers in parenthesis following a test code refer to the manual sections where further information may be found.

DO NOT USE NEGATIVE TEST CODES IF NOT LISTED. ILLEGAL ENTRIES MAY CAUSE INSTRUMENT MALFUNCTION ALONG WITH LOST OR ALTERED DATA. IF THE VIDEOBRIDGE BECOMES "HUNG UP", POWER MUST BE SHUT OFF TO RESET.

DO NOT ENTER TEST CODE 6 OR TEST CODE -6 WITHOUT ZRAM OPTION INSTALLED.

Table 2-1. Model 2150/2160 Test Code Functions

TEST CODE NO.	FUNCTION
CODE	Pushing <blue> <CODE> displays the list of test code names on the CRT display:

1	BIAS	15	BIN PRIORITY
2	RESET BINS	16	ANALOG BUSY
3	FORMAT TAPE	17	AUTO-LRC
4	PPM-D	18	(9) TO TAPE
5	RANGE HOLD	19	FILE NAME
6	Z-RAM	20	ALPHA KB
7	EDITION/BOOT	21	GO/NO-GO
8	HANDLER MODE	22	UN-CAL
9	KEYBOARDLOCK	23	GPIB/PET
10	OUTPUT CH-B	24	GPIB ADDR
11	STATUS>CH-B	25	GEN-REV
12	TAPE DIR.	26	BIN#+VALUE
13	LOAD SOURCE	27	MIN DIGITS
14	TAPE DELETE	28	---

(This table is continued on the following pages.)

Table 2-1. Model 2150/2160 Test Code Functions (cont)

TEST CODE NO.	FUNCTION
1 and -1	BIAS. Bias voltage is ON (capacitor measurements with voltage bias). To remove the bias voltage from the device-under-test use -1 CODE (2.10).
2	RESET BINS. All bin counters are set to zero--also clears counts in Non-Volatile Memory (2.7.5).
-2	RESET BINS. All bin counters and limits are set to zero--also clears limits and bin counters in Non-Volatile Memory (2.7.5).
3	FORMAT TAPE. Erases and formats cassette tapes--Model 2160 only (2.9.3).
4 and -4	PPM-D. 4 CODE enables dissipation factor display in parts per million (ppm). Half-sized zeroes appear to the right of significant digits to indicate proper ppm D value (e.g. .00012 D = 12o. ppm D). -4 CODE clears this mode (2.4.1).
5	RANGE HOLD (Automatic). The instrument will auto-range until it measures a part which is within 20 percent of a specified value, then enter the RANGE HOLD mode without further operator intervention. Value argument must be entered first. Percent limit is also selectable (2.5.3.1).

Table 2-1. Model 2150/2160 Test Code Functions (cont)

TEST CODE NO.	FUNCTION
6 and -6	Z-RAM. Memory Backup--when the Non-Volatile Memory option is installed, the VideoBridge saves set-up and bin count information during a line voltage failure or after a normal power down. Data storage is enabled by test code 6, and stored data is recalled by test code -6. DO NOT USE UNLESS NON-VOLATILE MEMORY OPTION IS INSTALLED (A.3).
7	EDITION. The screen readout will show the version number and date of the instrument's software. Also, installed RAM (Random Access Memory) capacity will be indicated as 4k for Model 2150 or 16k for Model 2160.
-7	BOOT. The instrument automatically returns to its power up conditions, which is useful for remote programming (2.3.2).
8	HANDLER MODE. Locks out the keyboard when handler interface option is installed. The display will read "NOW IN HANDLER MODE." The display is not active under this code. To de-activate this mode, temporarily ground Pin 21 of the Handler Interface rear panel connector (2.7.6, A.1).
-8	HANDLER MODE. Sets the VideoBridge to a special Handler routine displaying BIN number while locking the keyboard (2.7.6, A.1).

Table 2-1. Model 2150/2160 Test Code Functions (cont)

TEST CODE NO.	FUNCTION
9 and -9	KEYBOARD LOCK. 9 CODE locks all the keys except the SINGLE key. -9 CODE unlocks the keyboard. The keyboard may also be unlocked by one of the following methods: 1. Ground pin 21 on the Handler Interface rear panel connector. 2. Type "UNLOCK" through the GPIB Interface. 3. Type "UNLOCK" through Channel B of the RS-232C Interface (Appendix A).
10 and -10	OUTPUT CH-B. 10 CODE outputs measured results through Channel B of the RS-232C Interface at the end of each measurement cycle. -10 CODE clears the remote output command (A.2.1.2).
11	STATUS>CH-B. 11 CODE outputs status information from both the direct display and the status display of the VideoBridge through Channel B of the RS-232C Interface (A.2.9.1).
12	TAPE DIR. Displays the table of contents for a tape (2160 only). The filenames will be listed with the starting block to the left of the file-name (2.9.4.1).

Table 2-1. Model 2150/2160 Test Code Functions (cont)

TEST CODE NO.	FUNCTION
13	LOAD SOURCE. Load source code applications programs for Model 2160 (2.9.6.1).
14	TAPE DELETE. Deletes a specified file for Model 2160 only (2.9.6.2).
15 and -15	BIN PRIORITY. Redefines the binning priority when sorting capacitors. When a minor reject is detected, the VideoBridge makes an additional comparison to separate open-circuit parts into Bin 0 instead of Bin R. -15 CODE clears this mode (2.7.7).
16 and -16	ANALOG BUSY. The Analog Busy signal (or End of Conversion, EOC) is enabled for use with the Handler Interface Option. This mode allows the handler to advance to the next component for testing while calculations are still being made on the previous device-under-test. To clear this mode, use -16 CODE. Do not use 16 CODE unless Bin 11 limits have been set to zero (A.1.3).
17	AUTO LRC. The bridge will autorange and select the proper function for the component connected. Test frequency, test level, measurement speed, measurement mode (single or continuous) and equivalent circuit remain as programmed. To exit this mode, press any impedance measurement function key, any display mode key, or the HOLD key (2.3.2.)

Table 2-1. Model 2150/2160 Test Code Functions (cont)

TEST CODE NO.	FUNCTION
18	(9) TO TAPE. Saves keyboard lock (9 CODE) to tape on the Model 2160. To unlock the keyboard after the tape file has been loaded, use -9 CODE (2.9.5.3).
19	FILE NAME. Displays filename of last file loaded on the Model 2160. Upon entering this code, the VideoBridge will display: [FILE= filename] (2.9.6.4).
20 and -20	ALPHA KB. 20 CODE redefines the main VideoBridge keyboard to include full alphanumerics. To clear the alpha keyboard mode and return to the normal (default) keyboard mode, use -20 code (2.1.1.2)
21	GO/NO-GO. The GO/NO-GO mode displays PASS or FAIL symbols on the CRT display (2.7.8).
22 and -22	UN-CAL. Temporarily removes "CALIB" condition from present test setup. Zero correction offsets are recalled when either the test frequency or the test level for that setup is re-entered. -22 CODE permanently erases all stored zero offset values (2.3.5).
23 and -23	GPIB/PET. The SRQ line is reset when the VideoBridge is addressed as a talker. To clear this mode, use -23 CODE (A.2.16.3).

Table 2-1. Model 2150/2160 Test Code Functions (cont)

TEST CODE NO.	FUNCTION
24	GPIB ADDR. With the GPIB option installed, the instrument will display the address setting of the switches on the GPIB circuit card--P/N 46114 (A.2.8).
25 and -25	GEN-REV. Enables generator reversal for frequencies below 200Hz for noise reduction. -25 CODE (default condition at power-up) disables generator reversal below 200Hz, allowing faster measurement speeds. Entering FAST measurement mode also disables generator reversal (2.8, 3.3.1.1).
26 and -26	BIN # + VALUE. Top and bottom measurement values are displayed in small characters while in SORT mode. To clear this mode use -26 CODE (2.7.6).
27 and -27	MIN DIGITS. Allows the number of digits displayed to exceed limits normally applied by the VideoBridge. When preceded by a number between 1 and 6, this test code causes at least that number of digits to be displayed. -27 CODE programs 1 as the minimum digits displayed (1.1).
28	Not used.

2.1.1.2 Keyboard Overlay (2160 Only)

The Keyboard Overlay (P/N 55413) is used in conjunction with 20 CODE to redefine the main keyboard of the VideoBridge for full alphanumerics. The principal use of these characters is for entering names of cassette files. These names are listed on the tape directory (12 CODE) and are also used when storing and retrieving measurement data on the tape. For more information on using 20 CODE and the Keyboard Overlay to create tape file names, refer to section 2.9.5 of this manual.

> **NOTE:** The Keyboard Overlay is silkscreened on both sides. One side has the original keyboard functions. The other side has the new alphanumeric keyboard functions. Under normal operation, the overlay can be stored over the main keyboard with the original keyboard function face up. When the alternate keyboard function mode is selected, the overlay can be turned over to reveal the new alphanumeric functions. All discussion in this manual regarding the alternate keyboard function mode assumes the overlay is stored on the keyboard.

The Statistics and Analog applications programs use their own keyboard overlay. Each of these overlays is extended to fit over the 12 auxiliary keys as well as the main keyboard. When using STAT or ANALOG, these 12 keys on the righthand side of the keyboard are also redefined to display the appropriate applications program function.

STAT keyboard overlay--P/N 55410
ANALOG keyboard overlay--P/N 55412

The Alternate Keyboard layout is as follows:

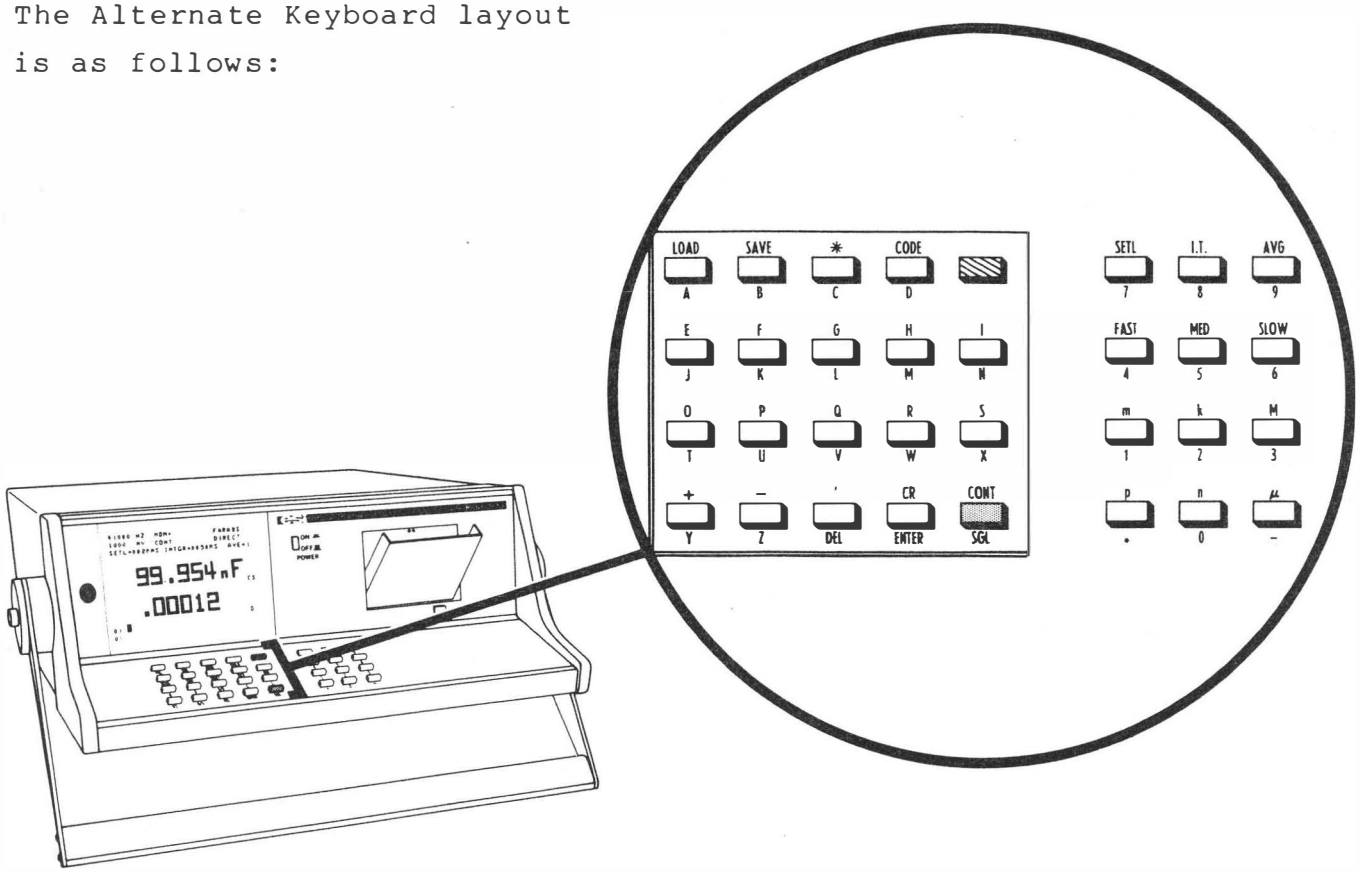

Figure 2-2. Model 2160 Front Panel with Overlay

Many keys on the keyboard have more than one function. A function labeled in white is selected by pushing the key directly above the label. An alternate function, labeled in blue, is selected by pushing the blue key followed by the key directly below the desired function. The following describes each key. (See Section 2.9.5)

KEY	DEFINITION
A-Z	Letters for entering tape filenames. Each character is echoed on the CRT as it is entered.
+,-, *	Plus, minus, and asterisk keys for entering tape filenames. Each character is echoed on the CRT as it is entered.

KEY	DEFINITION
'	Apostrophe. This MUST precede the file name when loading a file from tape or saving a file onto tape.
<blue>	Upper function key selects functions labeled in blue.
CODE	Selects special instrument functions not available directly on the keyboard. (See Section 2.1.1.1 Test Codes in this Manual for more details.)
SAVE	Stores the instrument's parameters on cassette tape. File name must be preceded by the ' sign. (Refer to Section 2.9.5, Saving Parameters for more information.)
LOAD	Re-programs the instrument with measurement parameters stored on the cassette tape. File name must be preceded by the ' sign. (Refer to Section 2.9.6, Loading Parameter Programs for more information.)
CR	CARRIAGE RETURN. Terminates special commands.
CONT	CONTINUOUS measurement mode. Operates in the same manner described in Section 2.1.1 in this manual.
DEL	DELETE last entry. Operates in the same manner described in Section 2.1.1 in this manual.

KEY	DEFINITION
ENTER	ENTER key is used for spacing as described in Section 2.1.1 in this manual.
SGL	SINGLE measurement mode. Operates in the same manner described in Section 2.1.1 in this manual.

To enter the alternate keyboard function mode, push <2> <0> <blue> <CODE>. The CRT will indicate that the alpha keyboard overlay is now operational.

EXAMPLE:

Push	Display	Comments
	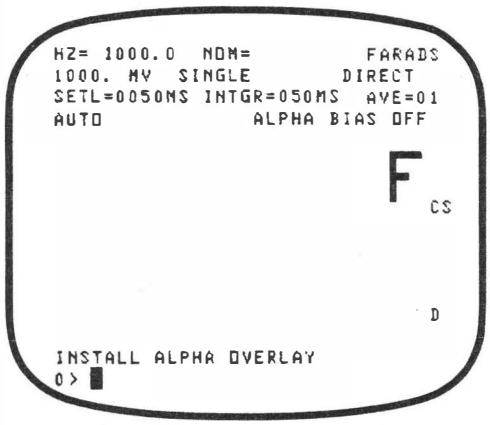	Indicates the ALPHA mode has been entered. Place the keyboard overlay alternate function side up.

To exit this mode and return to the original keyboard functions mode, push <-> <2> <0> <blue> <CODE> and follow the instructions on the CRT.

EXAMPLE:

Push	Display	Comments
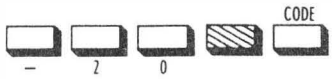	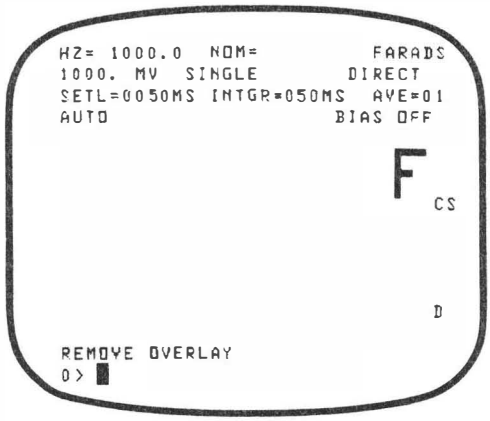	Place the keyboard overlay original function side up.

(For more information, refer to Section 2.9.5 Saving Parameters in this Manual.)

2.1.2 CRT Display

The 5-inch (diagonal) cathode-ray tube (CRT) presents a simultaneous display of those test parameters and measurement results that are most important to the operator. Models 2150/2160 feature two display formats--normal (direct) and binning (status).

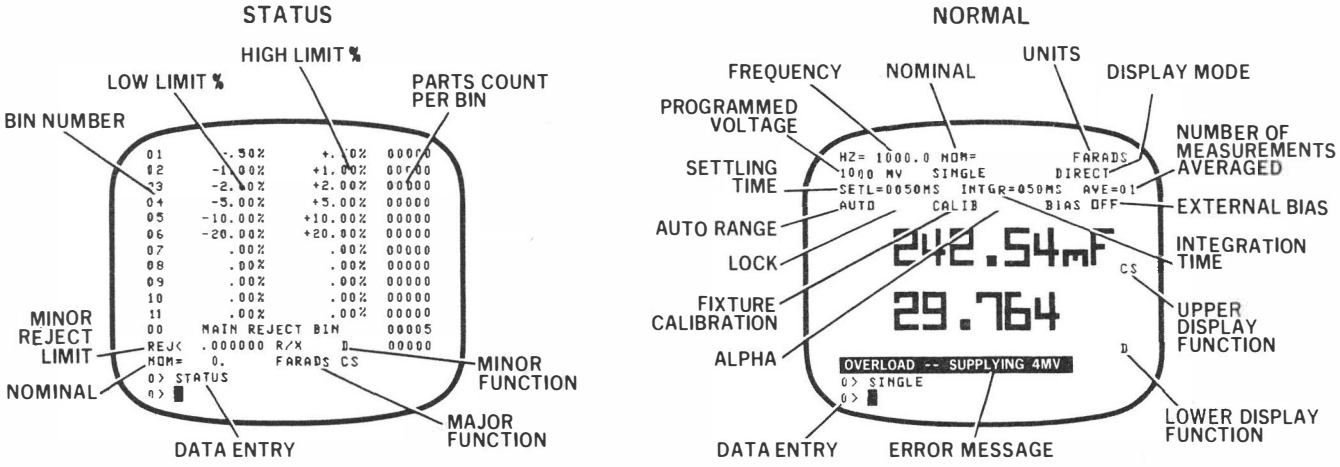

Figure 2-3. CRT Display Formats

Normal display format can be broken-down into three major areas:

1. Parameter field (top portion of CRT screen). It contains:

   - Test frequency in hertz (Hz)
   - Nominal value (when programmed)
   - Units of the top measurement display function
   - Test signal level in millivolts (mV) or milliamperes (mA)
   - Measurement mode -- continuous (CONT) or single (SINGLE)
   - Display mode -- Direct, Auto LRC, Deviation, GO/NO-GO, or Sort
   - Ranging mode -- Auto or Hold
   - Calibration (CALIB) indicator for test-lead or test fixture zero
   - Number of measurements averaged for each display
   - Settling time and integration time in milliseconds (ms)
   - BIAS ON/OFF, ALPHA keyboard overlay active, and keyboard LOCK

2. Measurement display (center portion of CRT screen). It contains:

   . Two readings
   . Unit multiplier and unit for each reading
   . Function and equivalent circuit mode for each reading

3. Data entry (bottom portion of CRT screen). It contains:

   . Data entry lines that echo the last keyboard entries.
   . Error message above data entry lines (see Section 2.11).

Status display is used when preparing for component sorting operation. It can be divided into two major areas--sorting limits and reject limit. For a more detailed explanation of the sorting operation and the status display see Section 2.7.1 in this manual.

2.1.3 Cassette Tape Loader (2160 Only)

The cassette tape of the Model 2160 is a feature that adds to the overall versatility of the instrument. The cassette can be used as a mass storage device for test parameters, measurement information, or optional applications programs. It stores often used setups for later retrieval, so repeatedly making the same setup becomes unnecessary. For a more detailed explanation of the cassette tape loader, see Section 2.9 in this manual.

2.1.4 Other Front Panel Controls

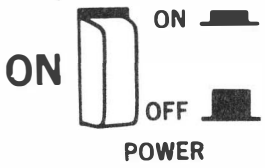

Turns instrument power ON and OFF.

Opens Cassette Tape Loader door for direct access to cassette tapes. (Model 2160 only)

2.2 REAR PANEL

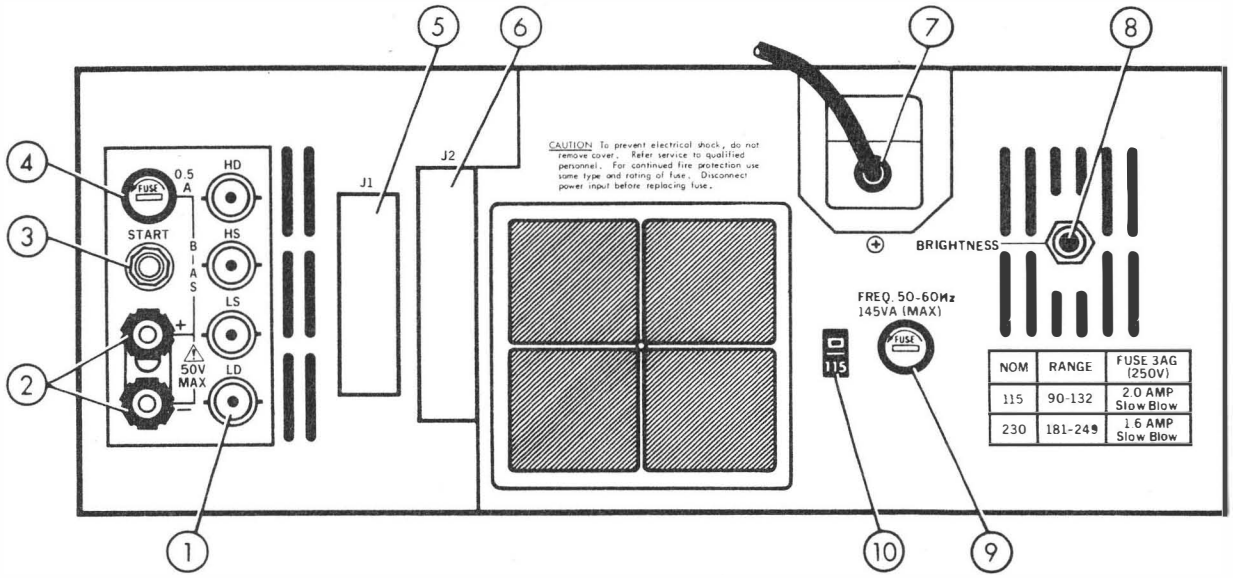

Figure 2-4. Rear Panel

2.2.1 Rear Panel Controls and Connectors

(1) HD, HS, LS, LD — Four BNC style connectors for making passively guarded, four-terminal-connection to the unknown.

WARNING

ELECTRICAL SHOCK HAZARD EXISTS WHEN BIAS SUPPLIES ARE CONNECTED TO THIS INSTRUMENT. WHEN EXTERNAL BIAS SUPPLIES ARE ATTACHED, THE BIAS VOLTAGES ARE PRESENT ON THE REAR PANEL BNC CONNECTORS. USE ONLY BIAS VOLTAGES UP TO +50VDC WITH EACH BIAS SUPPLY CURRENT LIMITED AT 100MA. DO NOT TOUCH, CONNECT, OR DISCONNECT THE MEASURED COMPONENT OR THE BNC CABLES WHILE BIAS VOLTAGES ARE APPLIED.

(2) BIAS Terminals — Two banana plug jacks (with removable strap link) provide connection of external bias supplies to the component being tested, up to 50VDC with bias supply current limited at 100mA. Bias supply polarity must match terminal indicators.

(3)	REMOTE START	A miniature phone jack style connector for remotely initiating measurements. (de-bounced switch contact closure for start.)
(4)	BIAS FUSE	A 0.5A 3AG fast blow fuse prevents damage to the instrument if a charged capacitor is connected to the input terminals or if excessive bias current is applied.
(5)	J1	An option inputs/outputs connector which allows connection to an interface option. Connector is present only when option is installed. Model 2160 has a standard RS-232C connector in this position.
(6)	J2	An option connector; outputs depend on option installed. Connector is present only when option is installed.
(7)	LINE POWER CORD	A standard 3-wire power cord for connection to nominal 115VAC at 48-66Hz or nominal 230VAC at 48-66Hz. (See Section 2.3.1 before using cord and connectors other than supplied.)
(8)	BRIGHTNESS CONTROL	Controls the brightness for characters displayed on the CRT.
(9)	POWER FUSE	The line power fuse used is 2.0A, 250V Slow-Blow for 115V operation and 1.6A, 250V Slow-Blow for 230V operation.
(10)	115/230 SWITCH	Selects the nominal line voltage.

2.3 INSTRUMENT SETUP

2.3.1 Power Requirements

The 2150/2160 requires a power source of 115VAC (90-132VAC) at 48/66Hz or 230VAC (180-250VAC) at 48/66Hz. Before turning the power ON, make sure the instrument is set to the proper line voltage and has the proper line fuse installed. The instrument contains a rear panel slide switch to select the nominal line voltage. See Figure 2-5 for proper line voltage settings.

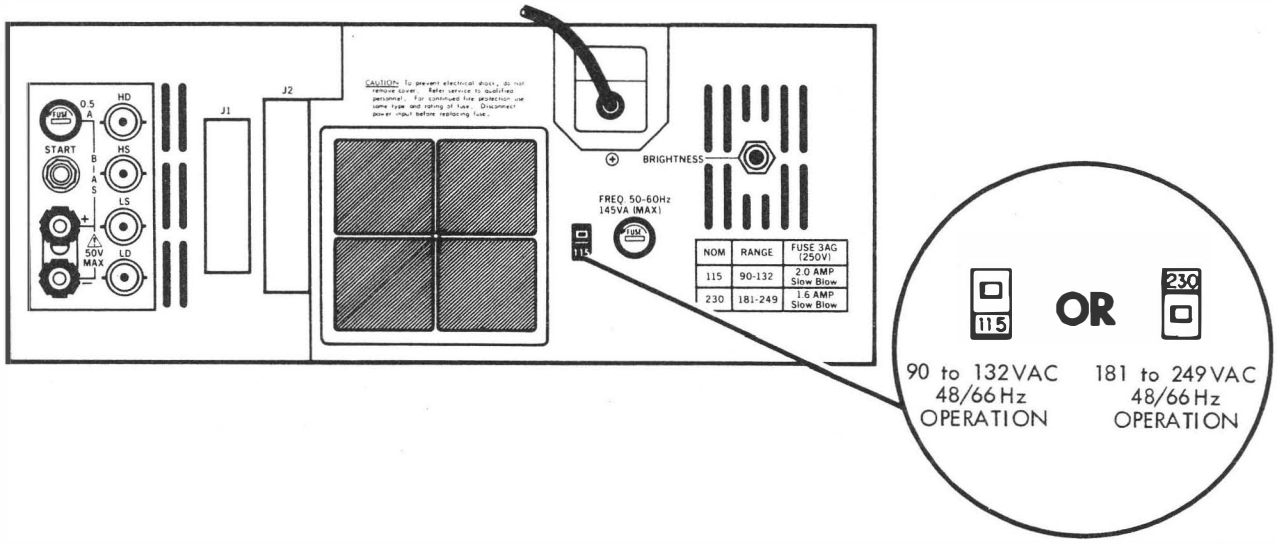

Figure 2-5. Line Voltage Settings

CAUTION

BECAUSE OF DIFFERING POWER REQUIREMENTS, INSTRUMENTS SHIPPED OUTSIDE THE UNITED STATES MAY REQUIRE A DIFFERENT POWER CORD CONNECTOR. WHEN PLACING A NEW CONNECTOR ON THE POWER CORD, CARE MUST BE TAKEN TO ASSURE ALL THREE WIRES (E,N,L) ARE CONNECTED PROPERLY. THE GREEN OR GREEN WITH YELLOW STRIPE WIRE IS ALWAYS CONNECTED TO EARTH GROUND (E). THE WHITE OR LIGHT BLUE WIRE IS CONNECTED TO THE NEUTRAL SIDE OF THE POWER LINE (N). THE BLACK OR BROWN WIRE IS CONNECTED TO THE HIGH SIDE OF THE POWER LINE (L). FIGURE 2-6 ILLUSTRATES THE AVAILABLE POWER CORD CONFIGURATIONS ACCORDING TO COUNTRY, INCLUDING THE STANDARD POWER CORD FURNISHED WITH THE INSTRUMENT.

WARNING

TO PREVENT POSSIBLE ELECTRICAL SHOCK OR DAMAGE TO THE INSTRUMENT, CHECK LOCAL ELECTRICAL STANDARDS BEFORE SELECTING A POWER CORD. THE INFORMATION PRESENTED HERE MAY NOT BE CORRECT FOR ALL LOCATIONS WITHIN THE REFERENCED AREAS.

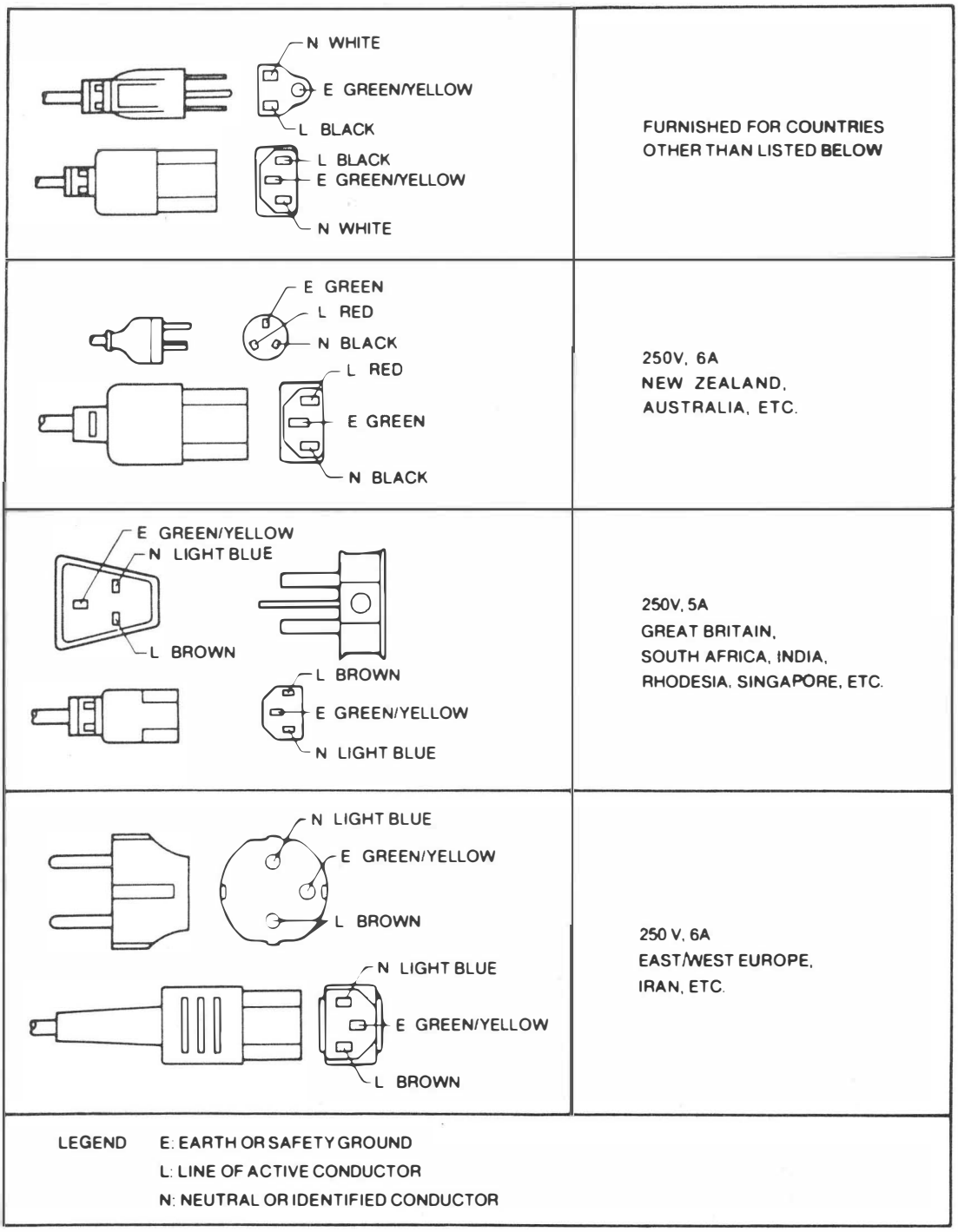

Figure 2-6. Power Cord Connectors

2.3.2 Applying Power

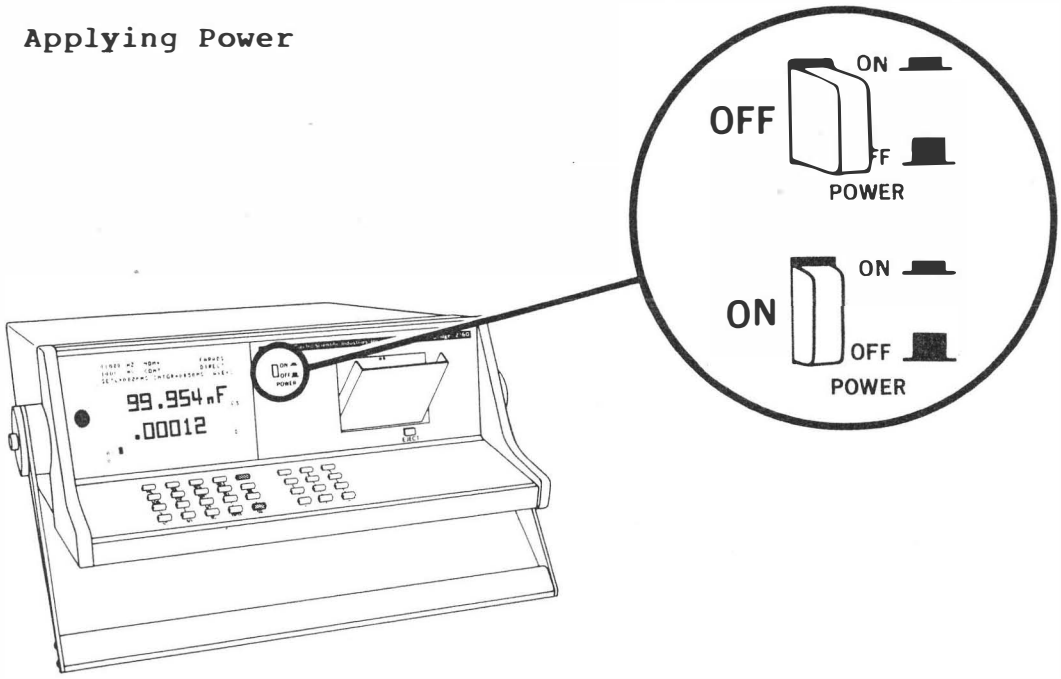

Figure 2-7. Power ON/OFF Switch

A front panel push-ON, push-OFF switch turns power ON and OFF (see Figure 2-7). When power is applied, the CRT display will illuminate in 15 seconds. Instrument warm-up time is 10 minutes. After initial turn-on, the bridge will automatically select the proper top display function and units for the component connected. The initial starting condition for other programmable parameters is:

Display Format	Direct
Display Mode	Auto LRC
Frequency	1000Hz
Nominal value	none
Test signal level	1000mV RMS
Measurement mode	Continuous
Settling time	50ms
Integration time	50ms
Measurements averaged	1
Binning limits 1 - REJ	+/- 0000%
SORT mode	%
Ranging mode	Auto

When the instrument is turned on, test code 17 (Auto LRC Mode) is enabled. The VideoBridge autoranges and determines whether the component being tested is an inductor, a resistor, or a capacitor and displays a series equivalent mode measurement in henrys, ohms or farads. Minor (loss) functions will be also be displayed according to the following:

1) L_s & Q,
2) R_s only (no minor),
3) C_s & D

If there is no component connected to the test fixture or clips, the VideoBridge will display "OPEN" when it detects a Z > 50MΩ, or "SHORT" when it detects a Z < 20mΩ.

Auto LRC mode can be exited by pressing any impedance function key, any display mode key, or the HOLD key. If Auto LRC mode is re-entered, then test level, test frequency, measurement speed, and equivalent circuit remain as programmed and the VideoBridge returns to autoranging. The XCHG key is disabled in Auto LRC mode.

If a cassette tape is in place when power is applied to the Model 2160, the message [AUTOSTART TAPE SEARCH] and a blinking cursor will appear on the screen. This AUTOSTART feature initiates an automatic search of the cassette tape directory for a file that has been designated for loading upon the application of power. If the search for such a file is unsuccessful, the message [NO AUTOSTART FILE ON TAPE] will be displayed. If no cassette tape is installed or if the unit is a Model 2150, the power up conditions are the same as those previously described. (Refer to Section 2.9.5, Saving Parameters for additional information on the AUTOSTART feature.)

2.3.3 Connections to Unknown

Models 2150/2160 make four-terminal measurements with passive guarding. They provide separate shielded connection cables for current drive and voltage sense to the high and low side of the unknown. These cables are fully shielded to minimize the effects of stray capacitance. They are labeled HI DRIVE, HI SENSE, LO DRIVE, and LO SENSE. The shields around the HIGH and LOW DRIVE cables are connected to the GUARD point (see Figure 2-8). The total load impedance (Z) to the guard point must be greater than or equal to the impedance of the device under test. Drive and sense leads for both HIGH and LOW terminals must make separate connections to the unknown.

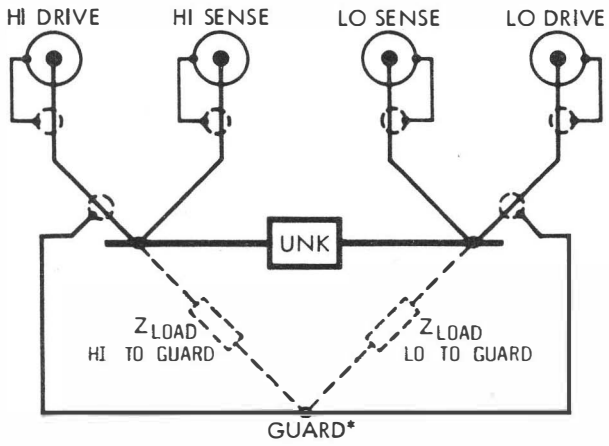

*Guard shields of HI and LO Drive cables must be connected at unknown end of test-leads.

Figure 2-8. Connection to Unknown

For accurate measurements of low impedance unknowns, separate drive and sense connections are necessary to prevent lead resistance from becoming a part of the measured unknown. Both drive and sense connections can be connected together to a single lead of the unknown (a 2-terminal measurement) if the lead is a small part of the unknown impedance ($R_{lead} < Z_{unk}/1000$ for <0.1% error). With proper connections as shown in Figure 2-8, cable length of 5 feet causes no loss of accuracy. Different cable lengths or special test conditions may result in accuracy loss.

Consult ESI factory for advice on your application.

2.3.4 Test-Leads vs Test-Fixtures

Certain measurement areas are more critical than others and require the use of a test-fixture rather than test-leads. Test-leads with KELVIN KLIPS are best used at frequencies below 1kHz or for higher frequency measurements where high accuracy is not needed (see note attached to KELVIN KLIPS). Changes in test-lead position change stray capacitance and/or inductance, making a true zero correction difficult to obtain.

At higher frequencies (above 1kHz), the need for a test-fixture becomes more and more important because test-lead (KLIP) spacing cannot be fixed as in a test-fixture. If higher accuracy, high frequency measurements are needed, use a test-fixture.

Also, if different test lead lengths are used (for example, changing from 5 foot leads to 3 foot leads), the high frequency trim may have to be re-adjusted. See Section 4.2 for more information on this trim.

2.3.5 Test Fixture Calibration

Measurement accuracy is enhanced by the 2150/2160's ability to correct for zero-offset errors caused by test-lead and test-fixture impedances (inductance, resistance, capacitance, etc.). These impedances appear in parallel or in series with the unknown component during measurement and add to the measured value. The zero calibration function measures these zero offset errors and stores them in memory. The stored value is automatically subtracted from each measured value.

The 2150/2160 can store offset measurements for four different combinations of settings for: test frequency, test signal, integration time, settling time and measurements averaged. Once these offsets have been measured for a given combination, the VideoBridge will retrieve them whenever that combination is re-entered. The word "CALIB" will be displayed to indicate that this combination has been calibrated.

If a fifth combination of settings is calibrated, the VideoBridge stores it and retains the three most recently used combinations already in memory. If five combinations in a row are entered, the VideoBridge will store them like a serial shift register. That is, the first combination entered will be overwritten by the fifth combination entered.

To temporarily suspend use of zero offset correction for a given combination that has been calibrated, enter test code 22. The VideoBridge makes a measurement without offset corrections, but still retains the calibration information for that combination. To clear this mode, re-enter the present test frequency. To permanently erase all existing zero calibration offsets, enter test code -22.

Zero calibration information is not stored on tape because the tape may be used in a different instrument, invalidating the corrections. A zero-calibrated file can be saved to tape. When it is loaded, the VideoBridge will initiate the calibration procedure. Zero calibration information may be stored on a permanent basis by use of optional Non-Volatile Memory. See Section A.3 for more information.

The VideoBridge does not support zero calibration by GPIB or RS-232C.

To ensure reliable calibration of zero offsets, follow these guidelines:

- maintain test lead spacing during and after calibration
- use a highly conductive material, such as low gauge wire, to close test leads in range 0 (don't clamp leads together).
- perform zero calibration at the speed (FAST, MED, SLOW or your own settings of I.T., SETL, AVG) at which measurements will be made.
- after pressing <blue> <CAL>, use only the <SGL> key to activate the calibration procedure.
- to calibrate while using external bias, enter test code 1 before pressing <blue> <CAL>.

The VideoBridge makes two types of zero calibration measurements -- Short-Circuit and Open-Circuit -- combined into one process:

1) For zero calibration of the lowest range (0), the lower data entry line will contain the message

CLOSE UNKNOWN - THEN PUSH "SGL"

Short the test leads and push <SGL>. The message will change to

CALIBRATING RANGE 0.

2) After calibration of range 0 has been completed, the lower data entry line will contain the message

OPEN UNKNOWN - THEN PUSH "SGL"

for zero calibration of ranges 1-4. Open the test leads and push <SGL>. The message will change to

CALIBRATING RANGE X,

where X represents each remaining range.

Each message will be followed by "OK" or "ERROR." If "OK", the VideoBridge will advance to the next range. If "ERROR," it will continue to calibrate the remaining ranges, but the range that failed will not be zero-corrected.

If all ranges calibrated were "OK," the VideoBridge will display "CALIB" on the bottom line of the parameter field. If "ERROR" was indicated on any range, [**CAL ?**] will appear in reverse video with no correction applied to the range that failed. If "ERROR" was indicated on all ranges, no message will appear and no correction will be applied to any range.

2.4 MEASUREMENT FUNCTIONS

The Model 2150/2160 will measure and display a variety of function combinations. The shaded areas of Table 2-2 show the functions that can be displayed simultaneously. Either selected function can be displayed as the top or the bottom function on the CRT screen. For a further explanation of programming measurement functions or exchanging their display positions, see Sections 2.4.1 and 2.4.2 in this manual.

Table 2-3. Measurement Functions

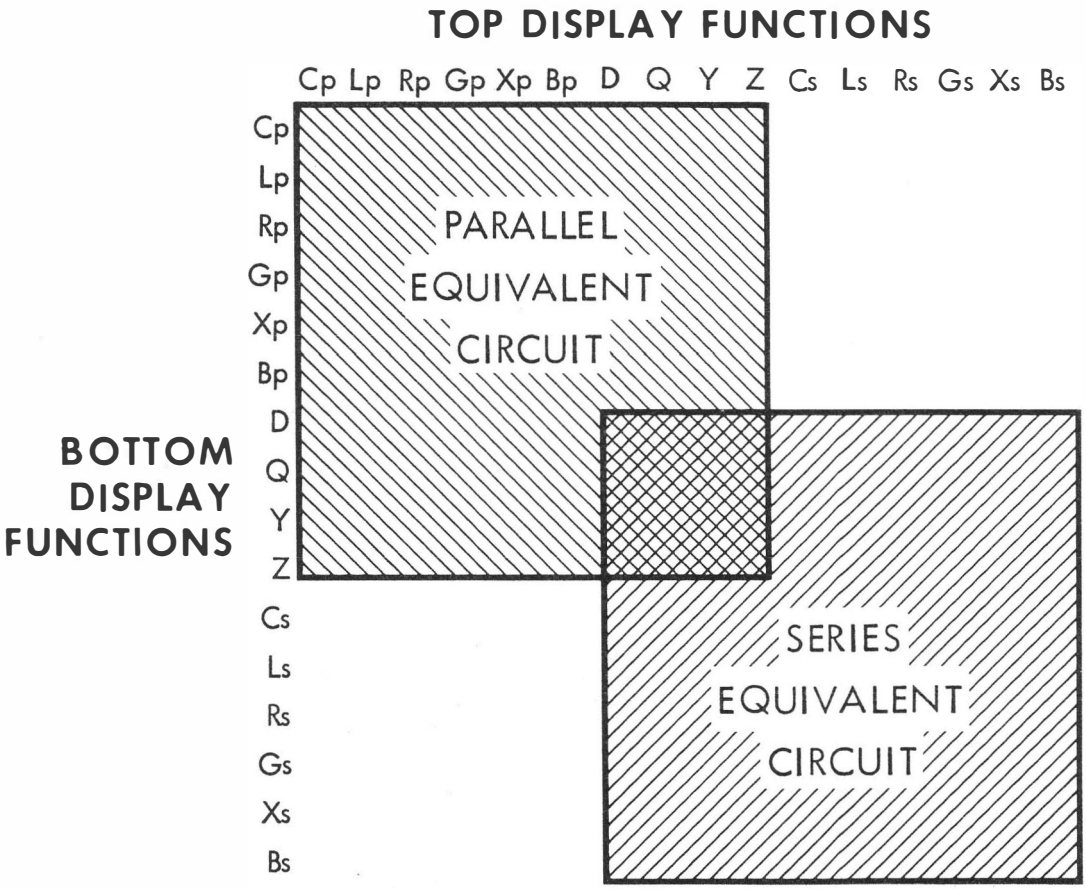

NOTE: Any top display can be displayed with any bottom display within the shaded areas.

2.4.1 Programming Measurement Functions

Measurement functions available with the Model 2150/2160 are: capacitance (C), inductance (L), resistance (R), dissipation factor (D), quality factor (Q), conductance (G), admittance (Y), impedance (Z), susceptance (B), and reactance (X). They are selected via the front panel keyboard by pressing the pushbutton for the desired function. The selected functions are displayed, one-above-the-other, on the CRT screen. Their position on the screen can be exchanged in direct mode at any time, i.e. Cs displayed above R can be exchanged to display R over Cs. Because of the versatility involved in displaying and positioning measurement displays and to assure the measurements are displayed as you want them, read the following precautions before programming measurement functions.

1. C, L, Y, Z, B, and X functions always replace the top measurement display on the CRT.

2. G, R, D, and Q functions always replace the bottom measurement display on the CRT.

3. G/R, B/X, and Y/Z functions are displayed in the parallel (PRL) and series (SER) equivalent circuit modes according to the following:

   Pressing the G/R, B/X, or Y/Z key displays resistance (Rs or Rp), reactance (Xs or Xp), or impedance (Z), in either circuit mode selected. Pressing the same key again displays conductance (Gs or Gp), susceptance (Bs or Bp), or admittance (Y).

4. Top and bottom measurement displays are exchanged using the XCHG key in DIRect display mode. This key does not work in Auto LRC, SORT, GO/NO-GO, or DEViation modes.

Figure 2-9 illustrates the initial measurement display with a capacitor connected. Measurement functions can be changed by pushing the desired function button, which takes the bridge out of Auto LRC. For best results, perform fixture calibration.

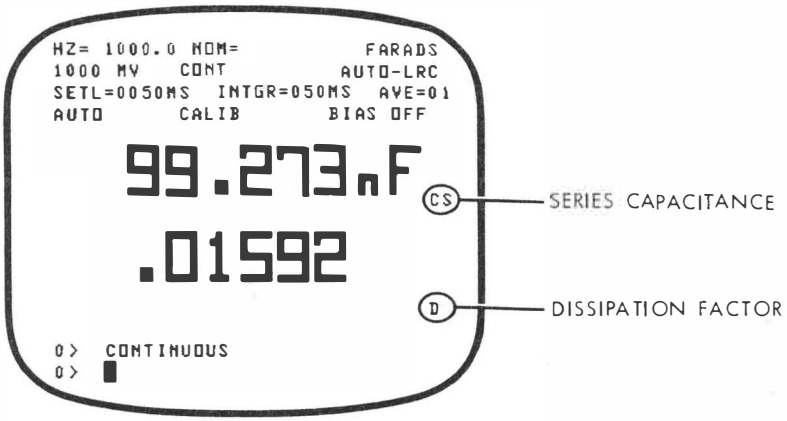

Figure 2-9. Measurement Display

Example: Display D measurement in parts per million (ppm).

Push	Display	Comments
	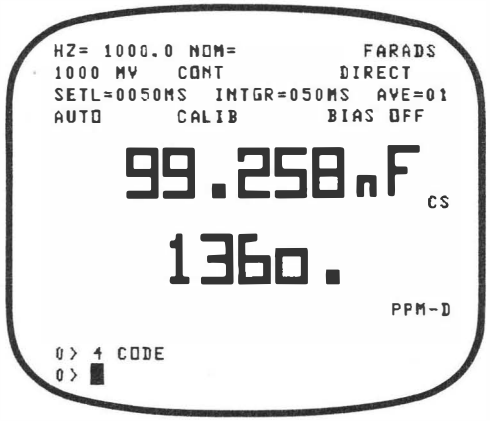	Dissipation is changed from a decimal representation to parts per million. (Return to decimal format by entering -4 CODE.)

NOTE: Dissipation values may contain half-sized zeroes. They appear to the right of the last significant digit. Also, entering 4 CODE takes the VideoBridge out of Auto LRC mode.

Example: Measure series inductance (Ls) and resistance (Rs).

Push	Display	Comments
L	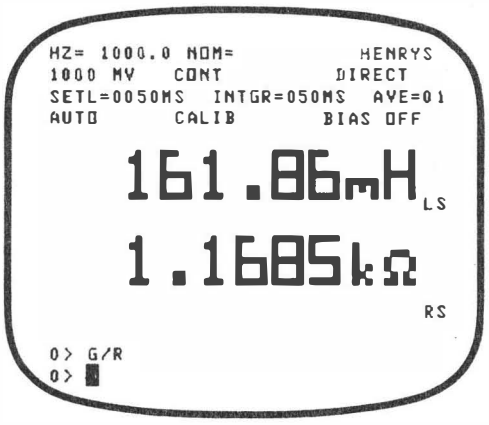	L key changes Cs to Ls in top display.
G/R		G/R key changes D to R (series equivalent circuit) in bottom display.

Example: Measure impedance (Z) and quality factor (Q).

Push	Display	Comments
Y/Z	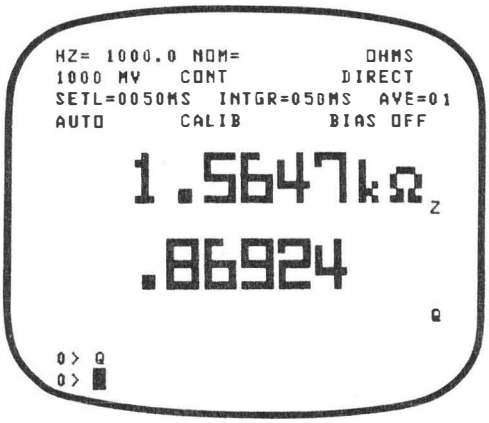	Y/Z key changes Ls to Z (series equivalent circuit) in top display.
Q		Q key changes R to Q in bottom display.

2.4.2 Exchanging Measurement Displays

The XCHG key exchanges the position of the two displayed measurements. Using the XCHG key allows two functions that normally appear in either the top or bottom display to be measured and displayed simultaneously.

Example: After turning instrument power ON, exit Auto LRC mode and set the instrument to measure and display Ls and Cs.

Push	Display	Comments
C	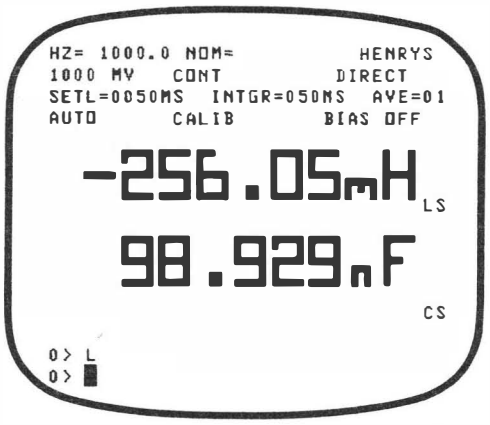	Exit Auto LRC mode. Move Cs to bottom display.
XCHG		L key sets top display to series inductance.
L		

Similarly, any two functions that normally appear in the bottom measurement display can also be displayed simultaneously.

Set the instrument to measure Rs and Q.

Push	Display	Comments
G/R	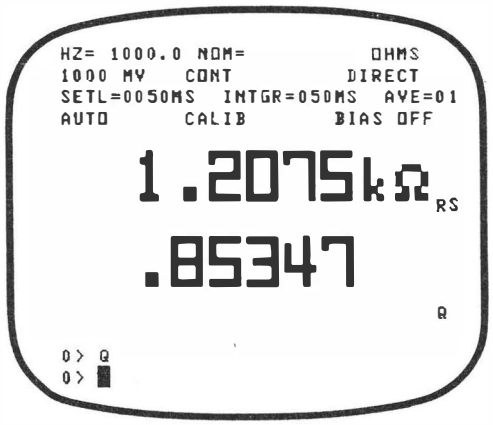	G/R key displays Rs (series equivalent circuit) in bottom display.
XCHG		Exchange key moves Rs to top display.
Q		Q key selects Q in the bottom display.

2.4.3 Series and Parallel Equivalent Circuit

Capacitors, inductors, and resistors are inherently imperfect impedance components, i.e. they have series and parallel, reactive and resistive elements. The Model 2150/2160 measures the reactive and resistive elements of an impedance component. (The relationship of these reactive and resistive elements is often described in terms of their series or parallel equivalent circuits.) The 2150/2160's PRL (parallel) and SER (series) functions steer the measured reactive and resistive values to an algorithm that calculates values in terms of series or parallel equivalent circuit. Series and parallel equivalent circuit mode measurements will provide differing results. The magnitude of difference depends on the quality of the component being measured.

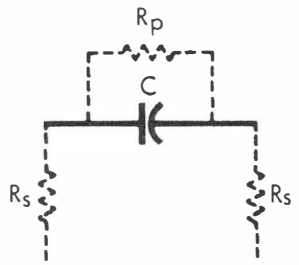

TYPICAL CAPACITOR

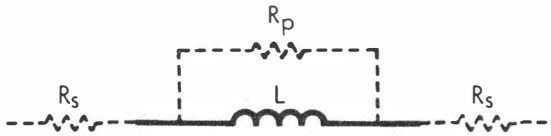

TYPICAL INDUCTOR

In determining which equivalent circuit mode to use, consider the following factors before making a selection.

1. What is the actual equivalent circuit of the capacitance being measured? This information should be available from the manufacturer's specifications. If not available, the equivalent circuit can be determined by a comparison of dissipation factor (D) value obtained at another frequency removed from the selected test frequency. If the test frequency goes up and the measured D decreases, then the unknown is most likely a parallel equivalent circuit. Likewise, if the test frequency goes down and the D decreases, the unknown is most likely a series equivalent circuit.

NOTE: The dissipation factor (D) of an inductor moves in the opposite direction from the D of a capacitor for a given change in frequency.

2. What is the end use for the component? The equivalent circuit used should provide the information most useful to determining the performance of a component in a particular application. For example, the information necessary for selecting a power supply bypass capacitor is obtained from the series equivalent circuit mode, while the information needed to select a capacitor for an LC resonant circuit is obtained from the parallel equivalent circuit mode.

3. Which equivalent circuit is most valuable to me? If no other information is available, the rule-of-thumb for selecting either series or parallel equivalent circuit mode is as follows:

Series equivalent circuit should be used when measuring components with a low impedance (basically large value capacitors, low value inductors) and parallel equivalent circuit for components with a high impedance (basically low value capacitors, high value inductors).

To convert a series equivalent circuit measurement to that of a parallel equivalent circuit use the formulas given in Figure 2-10. These formulas consider the effects of dissipation factor (D) with the measured value. (Dissipation factor (D) is always equal for both series and parallel equivalent circuits at a given frequency.)

CIRCUIT MODE		DISSIPATION FACTOR	CONVERSION TO OTHER MODES
C	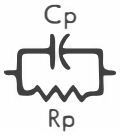	$D = \frac{1}{2\pi fCpRp} = \frac{1}{Q}$	$Cs = (1 + D^2)\,Cp$ $Rs = \frac{D^2}{1 + D^2}\,Rp$
		$D = 2\pi fCsRs = \frac{1}{Q}$	$Cp = \frac{1}{1 + D^2}\,Cs$ $Rp = \frac{1 + D^2}{D^2}\,Rs$
L	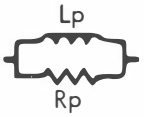	$D = \frac{2\pi fLp}{Rp} = \frac{1}{Q}$	$Ls = \frac{1}{1 + D^2}\,Lp$ $Rs = \frac{D^2}{1 + D^2}\,Rp$
		$D = \frac{Rs}{2\pi fLs} = \frac{1}{Q}$	$Lp = (1 + D^2)\,Ls$ $Rp = \frac{1 + D^2}{D^2}\,Rs$

Figure 2-10. Series and Parallel Equivalent Circuit Modes

Where:

L = Inductance
R = Resistance
C = Capacitance
f = test frequency
Q = Quality factor
X = Reactance
D = Dissipation factor

$$Q = \frac{Xs}{Rs} \qquad D = \frac{Rs}{Xs} \qquad Xs = \frac{1}{2\pi fCs}$$

Series and parallel equivalent circuit modes are selected by pushing either the PRL (parallel) or the SER (series) keys.

Example: The 2150/2160 initially measures series equivalent circuit when power is applied. To change to parallel equivalent circuit mode:

Push	Display	Comments
	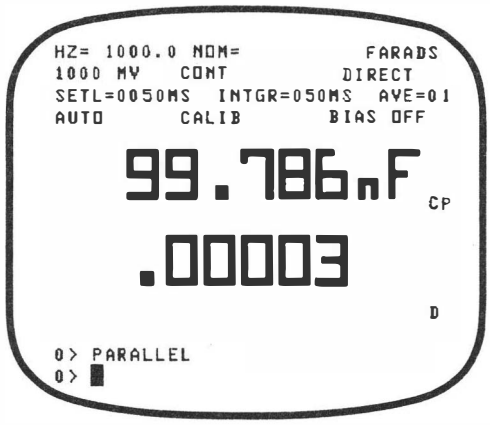	Cs is changed to Cp.

Three measurement functions are programmed in conjunction with the SER and PRL keys. They are Y/Z, G/R, and B/X. Each function can be displayed in either parallel or series mode. Impedance Z, resistance R, and reactance X, are displayed with the first press of the measurement function key. Reciprocal values admittance Y, conductance G, and susceptance B are displayed with the second key press. Subsequent key presses toggle the display of each reciprocal function.

To display R_p, press the G/R key after selecting the parallel mode. X_p or Z can be displayed by pressing the B/X key or Y/Z key in the parallel mode. R_s, X_s, and Z can be similarly displayed by pressing the G/R, B/X, or Y/Z key in series mode.

G, B, or Y can be displayed in either equivalent circuit mode by pressing the G/R, B/X, or Y/Z key a second time.

Example: Change the displayed parameters to display series capacitance and resistance, then change the measurement mode to display series capacitance and conductance.

Push	Display	Comments
G/R SER	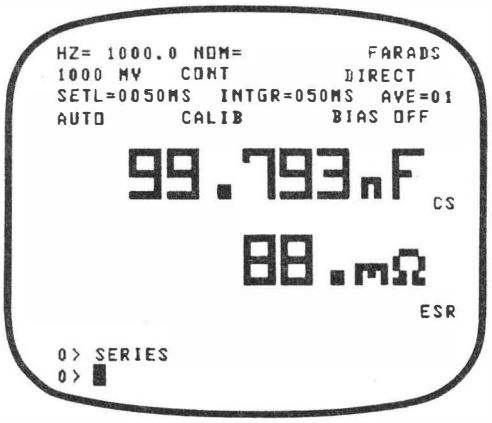	G/R key changes bottom window to R_S (series equivalent circuit).
THEN		
G/R	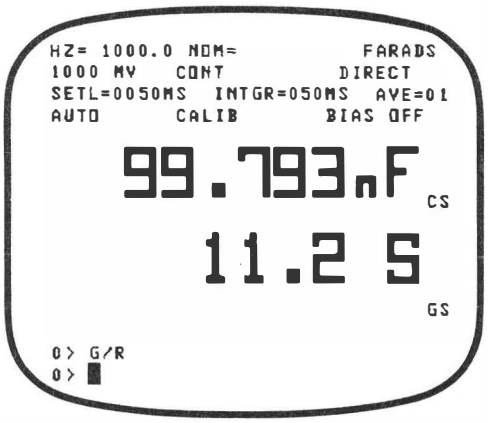	Change R to G by pressing <G/R> a second time.

Example: Enter parallel equivalent circuit mode by pushing the PRL key. Then push the G/R key to get R_p.

Push	Display	Comments
PRL G/R	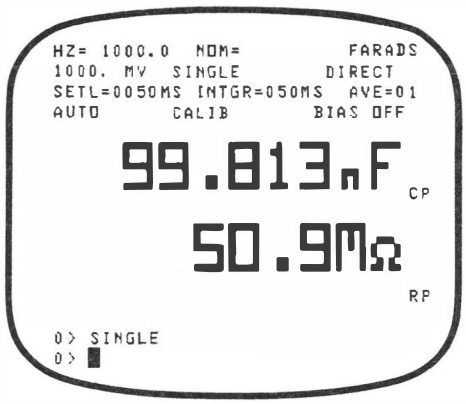	G/R, B/X, and Y/Z are "toggle" functions. Consecutive key presses alternate between the two functions on any key. (To get Gp, press <G/R> key a second time.

Use XCHG to get C, X_p.

Push	Display	Comments
B/X XCHG C	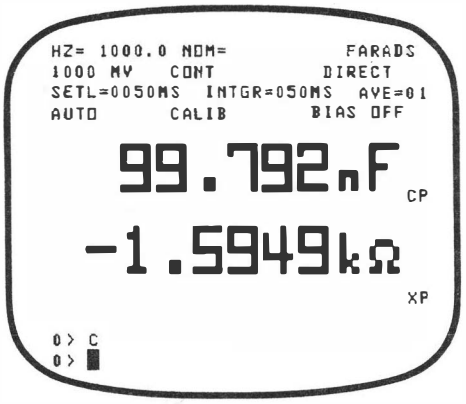	Push B/X, XCHG, C, to display C_p and X_p.

Use XCHG to get C, Z.

Push	Display	Comments
Y/Z XCHG C	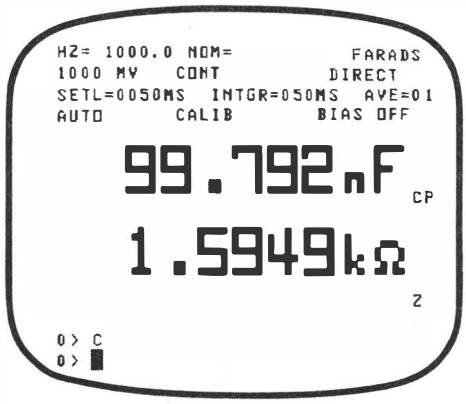	Push Y/Z, XCHG, C, to display C_p and Z.

2.5 TEST SIGNAL

The test signal, applied to the device under test, is a sinusoidal waveform derived from a digital source. It is programmable both in frequency and in magnitude from either the front panel keyboard or remotely via an IEEE-488 or RS-232C interface bus. When power is applied, the instrument's frequency and voltage level initialize to 1000Hz and 1000mV RMS, respectively.

> **NOTE:** Because using voltage or current test signals at their low extremes produces a low signal-to-noise ratio, measurement accuracy at these low levels may be seriously derated. Also, fewer digits will be displayed per measurement.

2.5.1 Frequency

The Model 2150/2160 has over 3000 selectable test frequencies between 20Hz and 150kHz. All frequencies are accurate to within +/- 0.01%. When power is applied, the instrument's test frequency initializes to 1000Hz. All frequencies are entered directly in hertz (Hz).

Example: Set the instrument's test frequency to 100Hz.

Push	Display	Comments
	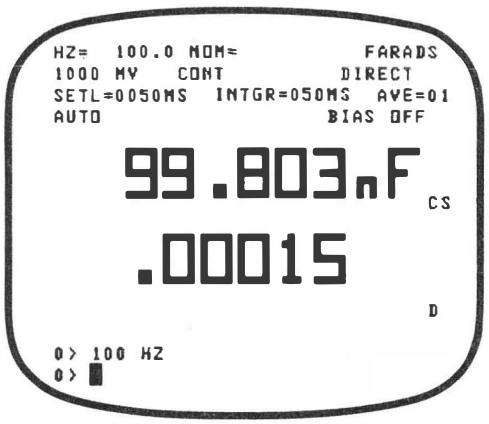	To allow the test signal to stabilize after a frequency change, wait 200ms before initiating a measurement.

The frequency selected is displayed on the CRT (top line -- small letters). The displayed frequency is the nearest available frequency greater than the selected value. The sine generator ROM of the 2150/2160 uses separate algorithms to generate test frequencies above and below 10,000Hz (except 12kHz, 15kHz, 20kHz, 30kHz, and 60kHz--which are generated by the "below 10,000Hz" algorithm).

Table 2-3 shows some of the commonly used frequencies below 10kHz. When F is at or below 10kHz, or when F is above 10kHz and yields an integral quotient when divided into 60,000, the following formula is used to determine which frequencies are available:

$$F = 60kHz/N_1$$

Where: N_1 is an integer $1 \leq N_1 \leq 3000$

Table 2-4. Test Frequencies Below 10kHz and Divisors of 60kHz Yielding Integral Quotients

N_1	Frequency (Hz)	N_1	Frequency (Hz)	N_1	Frequency (Hz)	N_1	Frequency (Hz)
1	60,000	12	5,000	80	750	500	120
2	30,000	15	4,000	100	600	600	100
3	20,000	20	3,000	120	500	1000	60
4	15,000	30	2,000	150	400	1200	50
5	12,000	40	1,500	200	300	1500	40
6	10,000	50	1,200	300	200	2000	30
10	6,000	60	1,000	400	150	3000	20

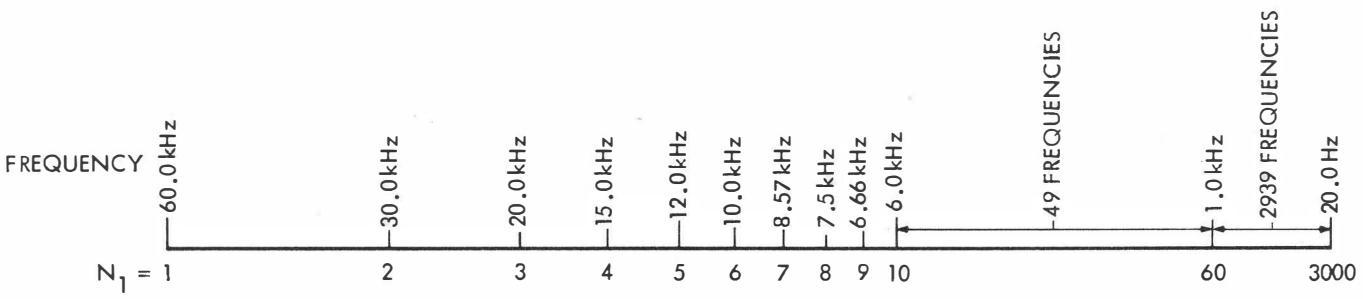

Table 2-4 shows the 23 available frequencies above 10,000Hz, determined by the following formula:

$$F = 300kHz/N_2$$

Where: N_2 is an integer $2 \leq N_2 < 30$ (excluding 5, 10, 15, 20, 25 which yield the frequencies already derived in Table 2-4).

Table 2-4. Test Frequencies Above 10kHz

N_2	Frequency (Hz)	N_2	Frequency (Hz)	N_2	Frequency (Hz)	N_2	Frequency (Hz)
2	150,000	11	27,273	19	15,789	28	10,714
3	100,000	12	25,000	21	14,286	29	10,345
4	75,000	13	23,077	22	13,636		
6	50,000	14	21,429	23	13,044		
7	42,857	15	20,000	24	12,500		
8	37,500	17	17,647	26	11,538		
9	33,333	18	16,667	27	11,111		

For further information on frequencies and the sine generator circuit, refer to Section 3.3.

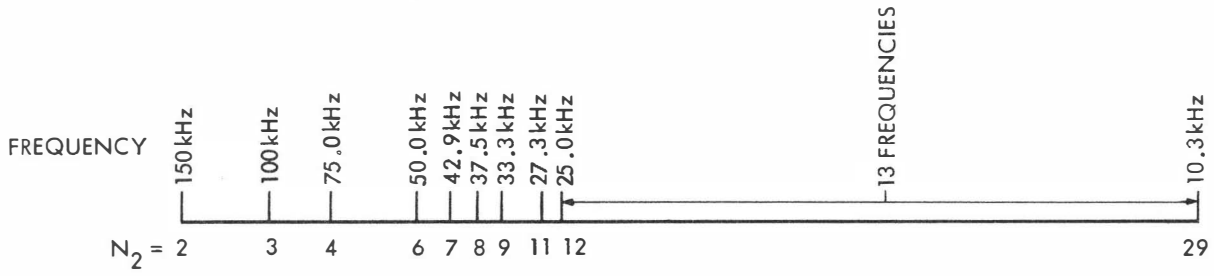

Any frequency entered between two available frequencies will automatically divert to the higher frequency.

Example: Set the test frequency to 15,750Hz.

Push	Display	Comments
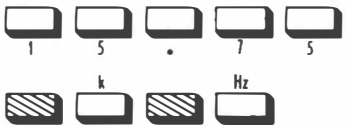	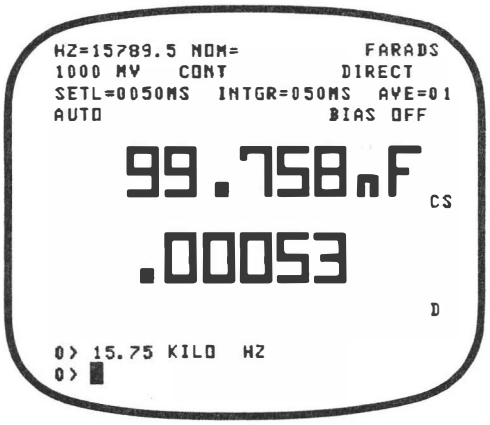	Frequency (15.75kHz) automatically diverted to the closest higher frequency (15,789Hz).

Notice in the examples above, as numbers are entered, they are echoed on the CRT. When the entry was terminated by pushing Hz, the 2150/2160 selected the closest, higher frequency available.

NOTE: In the above examples, changing the test frequency removes the word "CALIB" from the display. Test fixture offset corrections are only valid at the frequency at which they are calibrated. For optimum measurement accuracy, zero offset calibration must be performed after changing to an uncalibrated test frequency/test signal combination.

2.5.2 Signal Levels

The test signal voltage level initializes to 1V RMS (1000mV) when instrument power is applied. The test signal level can be changed at any time to meet testing requirements. However, changing test signal level requires re-calibration of the test fixture. Voltage is programmable from 5mV to 1500mV RMS in 1mV steps. Current is programmable from 0.1mA to 100mA in 0.1mA steps.

Example: Set the amplitude of the test signal to 100mV RMS.

Push	Display	Comments
	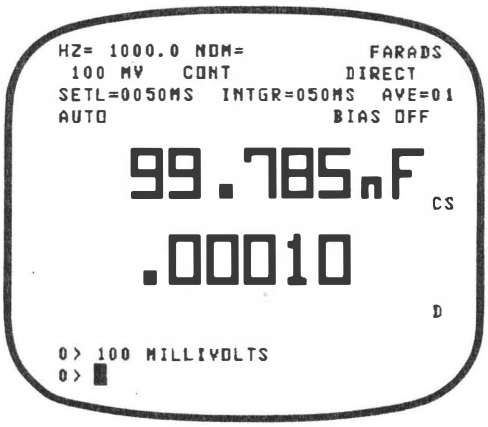	To allow the test signal time to stabilize after a signal level change, wait 200ms before initiating a measurement.

To optimize measurement accuracy, care should be taken when selecting test signal levels. Measuring high impedance components at very low test voltages or very low impedances at very low current levels can cause measurements to be erratic due to a poor signal-to-noise ratio.

The test level vs. impedance charts (Tables 1-4, 2-5) in this manual are to be used as an aid to determining the optimum test signal level at a nominal frequency of 1kHz. They do not indicate absolute instrument specifications, due to the overwhelming number of test frequencies available.

Table 2-5. Test Level vs Impedance (typical at 1kHz)

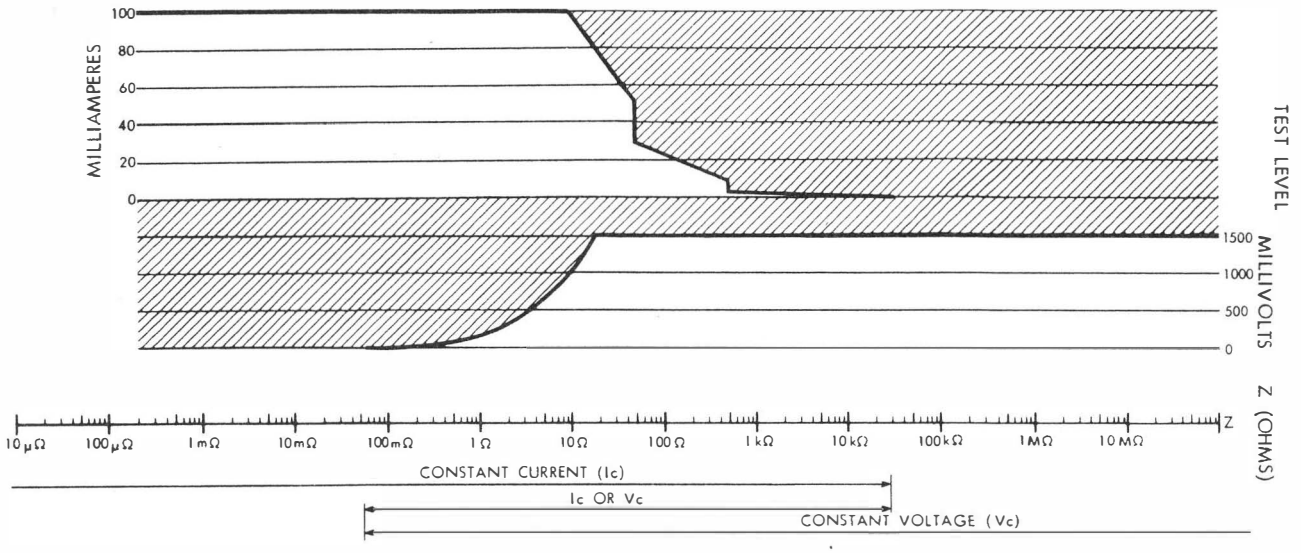

Table 2-5 shows typical test level limitations compared to the impedance of the component under test at 1kHz. The shaded areas indicate test signal levels not available for a given impedance.

Test currents can be programmed between 0.1mA and 100mA. For unknown impedances between 0 and 20 kilohms, set the test current directly. For unknown impedances over 20 kilohms, the test current is determined by dividing the voltage level by the unknown impedance.

For best measurement results, select a test signal level that will provide the best signal-to-noise ratio. High test signal levels are used for general component testing (capacitors, resistors, and certain inductors). Low test signal levels are used for testing devices requiring low operating-signal levels (semiconductor devices, inductors, and non-linear impedance devices).

Under certain conditions a test level can be programmed that the VideoBridge cannot supply. This is due to a mismatch occurring when a low impedance part is measured with a constant voltage or when a high impedance part is measured with constant current. When this happens, the instrument will supply a test signal less than the level programmed and display one of the following error messages:

[OVERLOAD ! -- SUPPLYING xx MV] for low impedance devices

OR

[OVERLOAD ! -- SUPPLYING xx MA] for high impedance devices

Where xx = the actual value of test signal level supplied by the VideoBridge.

In a voltage overload condition, the instrument will supply the voltage available at a maximum current of 100mA.

In a current overload condition, the instrument will supply the current available at a maximum voltage of 1500mV.

Measurements taken at these reduced signal levels are valid for that signal level. To clear the overload message, do one of the following:

1) re-enter a test signal level less than or equal to the amount displayed by the error message

2) for a voltage overload, change from voltage to current

3) for a current overload, change from current to voltage.

NOTE: To maintain measurement accuracy, test-lead or test-fixture calibration must be performed after changing to an uncalibrated test frequency/test signal combination.

2.5.3 Measurement Range

The Model 2150/2160 is basically a continuously ranging instrument (in AUTO range). Ranging is a transparent operation that makes the instrument appear to have only one range throughout its entire impedance measuring capabilities.

Actually, ranging is achieved by making an initial measurement before making the actual measurements for display. This initial measurement is made with very short integration times and is completely unaffected by the values programmed for measurement speed or test level. The sole purpose for this measurement is to determine the proper range resistor. This measurement is not displayed. With the proper range resistor selected, the instrument makes a measurement and displays the results. Range 4 is locked out above 10kHz.

Refer to Table 2-6 for ranging data.

Table 2-6. Model 2150/2160 Impedance Ranging Chart

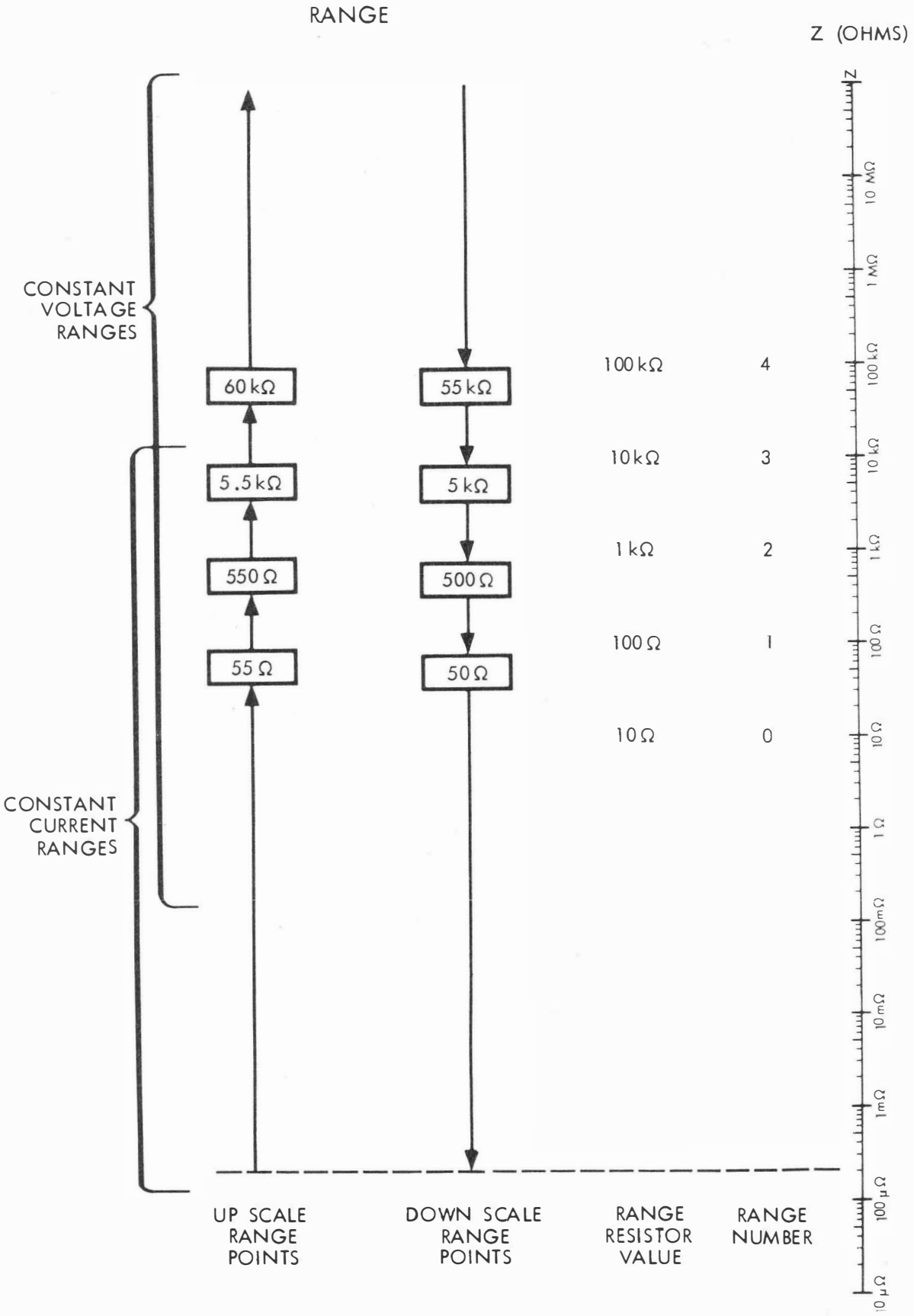

Table 2-7. Reactance Chart

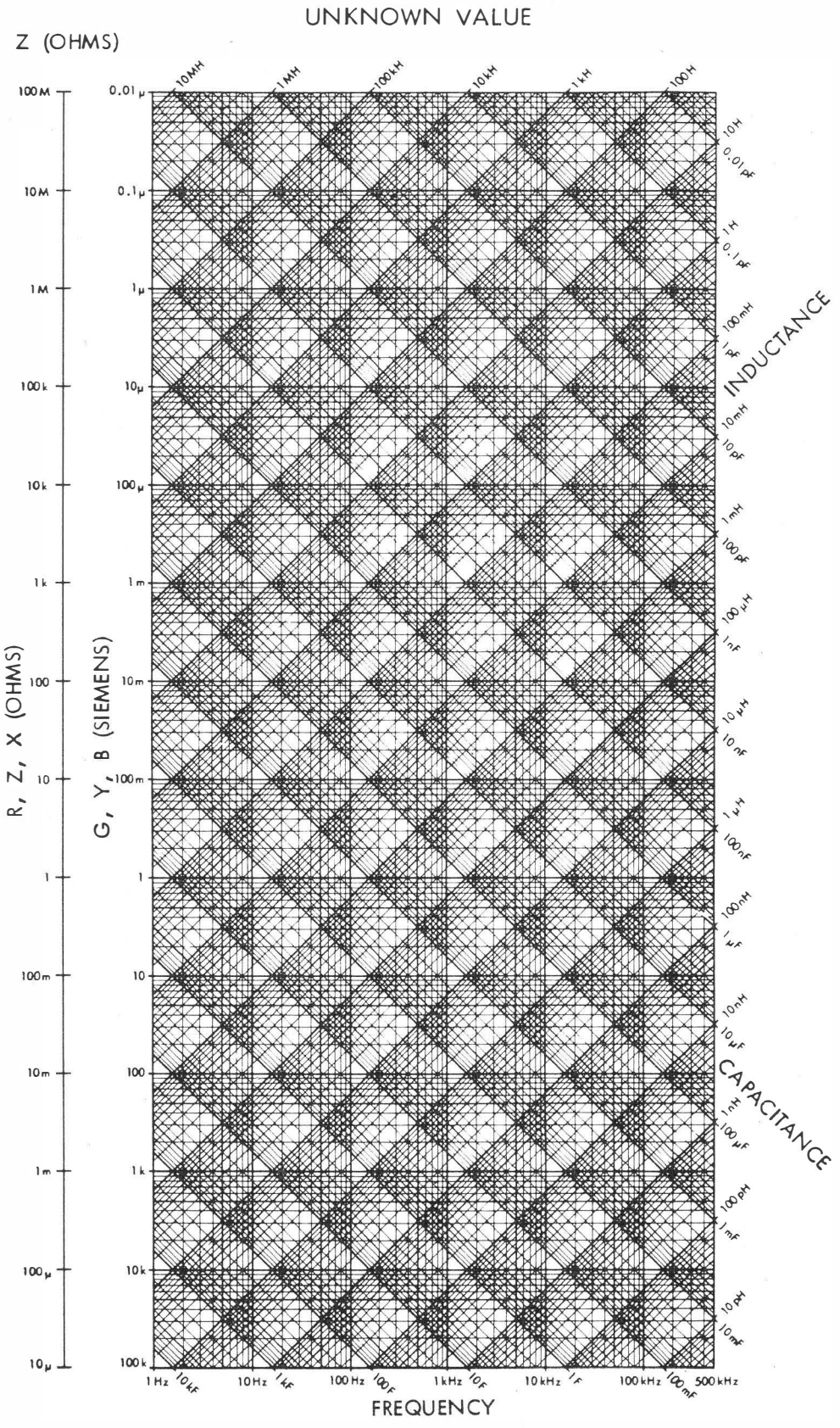

To find the span of capacitance, inductance, or other measurement parameters for a particular impedance range (shown in Table 2-6) at a particular frequency use Table 2-7 as follows:

1. Find the impedance (Z) along the left margin of Table 2-7.

2. Find the operating frequency (Hz) at the bottom of Table 2-7.

3. Find the intersection of the horizontal impedance line and the vertical frequency line.

4. Find the closest diagonal line to the intersection.

5. Move down the diagonal line to the right or bottom margin to find the corresponding capacitance value. Move up the diagonal line to the right or top margin to find inductance. Resistance, conductance, admittance, susceptance, and reactance can be found in the two adjacent columns of the left margin.

2.5.3.1 Range Hold

When testing many components of the same value where speed is a prerequisite, the pre-measurement described in Section 2.5.3 can be eliminated by using range HOLD. (The range finding measurement takes a minimum of 60ms. Due to increased integration time, range finding measurements made at frequencies below 500Hz will take longer.)

RANGE HOLD can be set in either of two ways:

1. In the Manual-Hold Mode, described below,

   STEP 1. Connect a component to the test leads or fixture.

   STEP 2. Allow one measurement to be made, then push the HOLD button.

OR

2. Auto-Hold Mode via 5 CODE. This is for use with component handlers where it is inconvenient to place a part in the test fixture. Activate the Auto-Hold mode by entering the part value then pushing <5> <blue> <CODE>. This sets an internal control signal which is monitored during measurements. When a part is measured that is within +/-20% of the top measurement display value, the instrument changes from AUTO Ranging to the HOLD mode without operator intervention. This allows a handler to run until a part is present in the jaws. The VideoBridge then holds the range.

EXAMPLE:

Push	**Display**	**Comments**
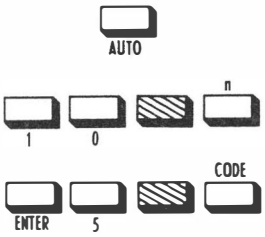	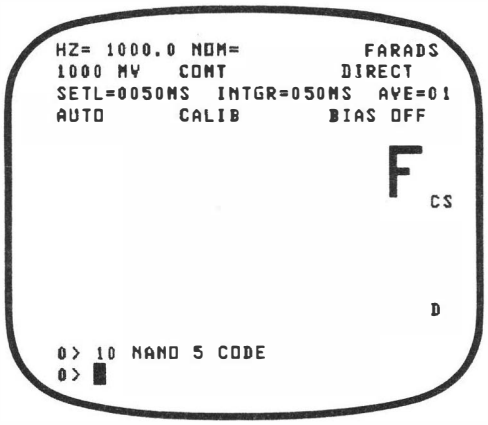	Set instrument to AUTOrange mode. Sets AUTO-HOLD mode for 10nF.

NOTE: If the 20 percent limit is not convenient, this value can be changed. Enter the desired percentage (expressed as a positive decimal) when entering the part value:

<decimal specifier> <ENTER> <part value> <ENTER> <5> <blue> <CODE>

where <decimal specifier> is a numeric value representing the desired percent limit, i.e. <.><5> = 50%, <.><1> = 10%, <.><0><5> = 5%, etc. and <part value> is an entry such as 10nF in the above example.

Display	Comments
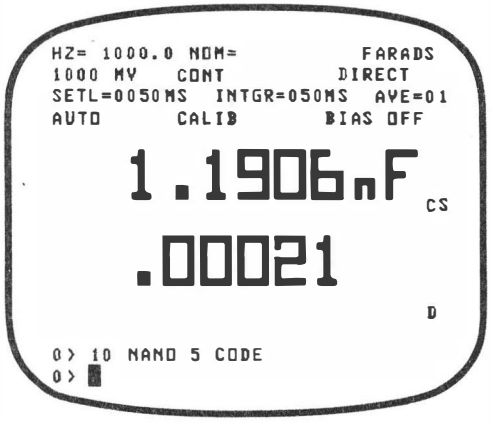	Instrument begins measurement in AUTO mode.
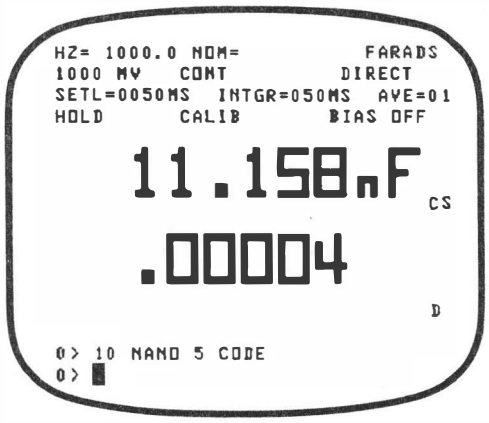	Instrument measures part that is within +/- 20% of the specified range value for the top measurement display and sets the HOLD mode accordingly.

NOTE: The 2150/2160 allows zero calibration while in Range Hold (eliminating the need to go to AUTO, zero the fixture or clips and re-enter Range Hold). To do this, the instrument leaves Range Hold, calibrates each range, and returns to Range Hold.

If a measurement is more than 100 times larger or smaller than the present range resistor, OUT OF RANGE will be displayed (ERROR ANALOG will be displayed on the highest or lowest range). Return to the continuous ranging mode by pushing the AUTO button.

(See Section 2.9 CASSETTE TAPE LOADER for information on saving RANGE HOLD as part of a parameter file.)

2.5.4 Continuous and Single Measurements

Continuous measurement mode is initially selected when instrument power is applied. In the Continuous mode the instrument makes 1 measurement and calculates the selected display value. Immediately after a measurement is completed, a new measurement is initiated. The continuous measurement mode is entered by pushing the blue key followed by the CONT key. In Autorange, the CRT display is updated once every 500 milliseconds when medium measurement speed is selected.

To perform single measurements, press the SGL button. The instrument will make one measurement and update the display. Single measurements can also be initiated via the rear panel remote start jack. Remote start requires a "de-bounced" switch or relay closure to ground to initiate a single measurement.

Example: Set the instrument to the continuous measurement mode.

Push	Display	Comments
	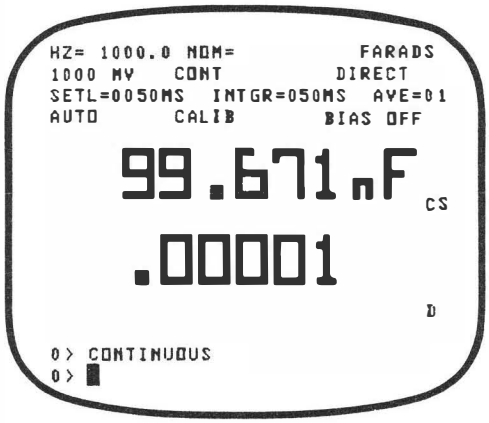	Selects continuous measurement mode.

To set the VideoBridge to single measurement mode, push the SGL key.

2.5.5 Delete

The DEL key removes the last character entered while programming data into the 2150/2160.

Example: Set the nominal value to 100uF.

Push	Display	Comments
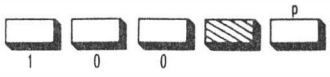	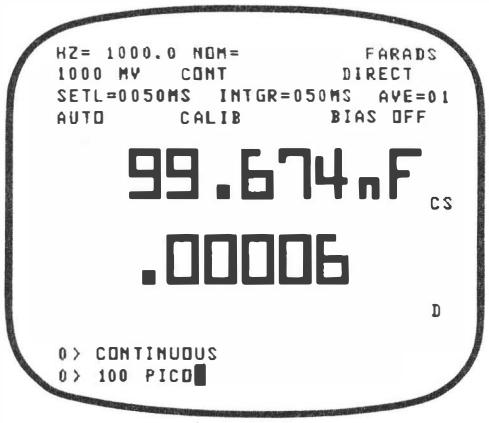	OOPS! Wrong prefix.
	0 > 100 PIC	One character is
	0 > 100 PI	erased for each push
	0 > 100 P	of the delete key.
	0 > 100	

Re-enter the correct data.

Push	Display	Comments
	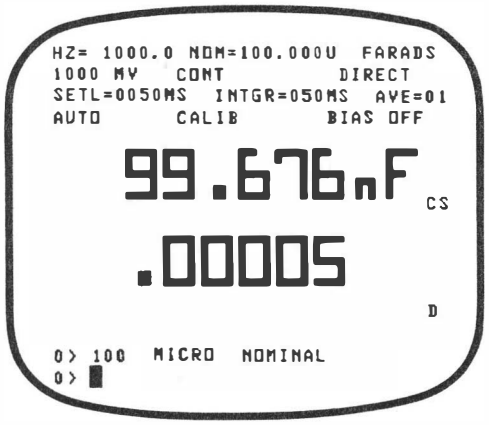	Correct value is programmed.

If the entry has been terminated (by pushing the NOM button in this example), the DEL button will no longer remove the incorrect data. However, the correct data can be reprogrammed as a new entry.

2.6 DEVIATION MEASUREMENT

Two types of deviation measurement are possible with the Model 2150/2160; deviation as a percent of nominal or absolute deviation from a nominal in units. Deviation measurements can be made using either autoranging or range hold modes. In the autoranging mode, the 2150/2160 will change ranges to allow percent deviations from -100% to +999,999% of the preset nominal value (limited only by the number of digits displayed). In the range hold mode, the range of percent and absolute deviations are limited by the measurement ranges' upper and lower boundries. Deviation calculations require a small amount of time to complete, so measurement speed is decreased slightly.

2.6.1 Nominal Value

To make deviation measurements or to sort into percent tolerance bins, a nominal value must first be set. A nominal value can be programmed at any time. It is programmed as a number with multiplier and assumes the units in the top measurement display. The nominal value is compared with the measured value. The comparison result is displayed as the top reading on the CRT (in deviation mode) or indicated as an appropriately binned part (in sort mode).

> **NOTE:** A non-zero nominal value must be set when using any of the following: deviation mode, % sort mode, 8 CODE, -8 CODE, or 21 CODE.

To set a nominal value, enter the desired value with multiplier (p,n,u,m,k,M) then push NOM VALUE. The entry takes the same units as selected for the top measurement display.

Example: Set a nominal value of 15.9nF.

Push	Display	Comments
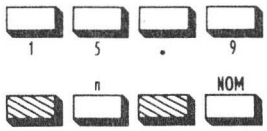	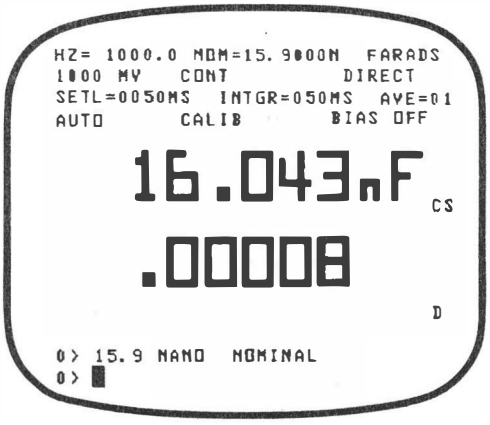	Nominal value takes on the units of the top displayed function.

NOTE: Only one nominal value can be set at a time. To store the present measurement as the nominal value, press

<0> <blue> <NOM> <blue> <NOM>

(or just <blue> <NOM> if the nominal value is already 0).

This is useful when making comparative measurements against a standard.

2.6.2 Deviation Mode

The deviation mode (DEV) compares the nominal value against the calculated value shown as the top measurement display. This top display is replaced by the comparison results--shown as either a percent or an absolute deviation. To enter the percent deviation mode, push <DEV>.

Example: Make deviation measurements using the nominal value set in the previous example.

Push	Display	Comments
	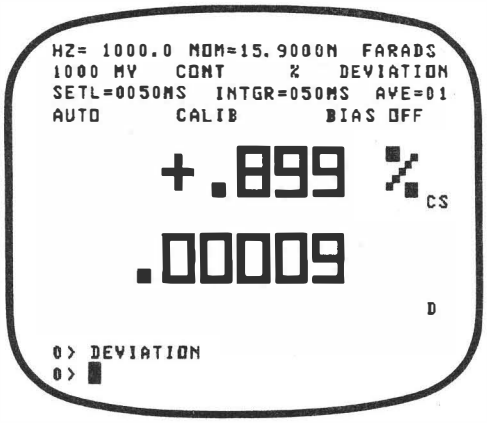	Enter deviation measurement mode. Deviation is the top displayed value.

NOTE: XCHG is disabled while in deviation mode.

NOTE: Deviation is not available when Q and D are both displayed.

2.6.3 Absolute Deviation

The difference between the nominal value and the measured value (top reading) can be displayed as either absolute or percent deviation. Percent deviation is initially selected when power is applied. To display absolute deviation, push <blue> <ABS>.

Example: Continuing with the previous examples, the instrument was displaying percent deviations. Change to display absolute deviation.

Push	Display	Comments
	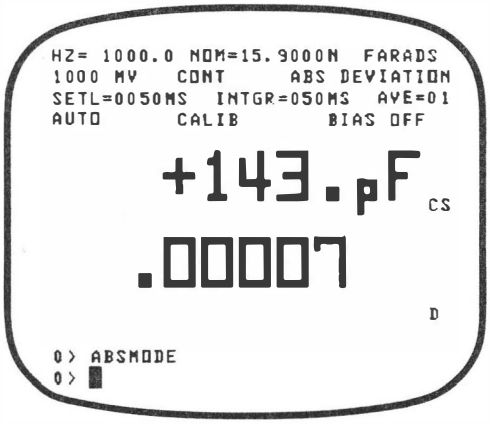	Display absolute deviation.

Example: Return to percent deviation mode.

Push	Display	Comments
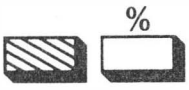	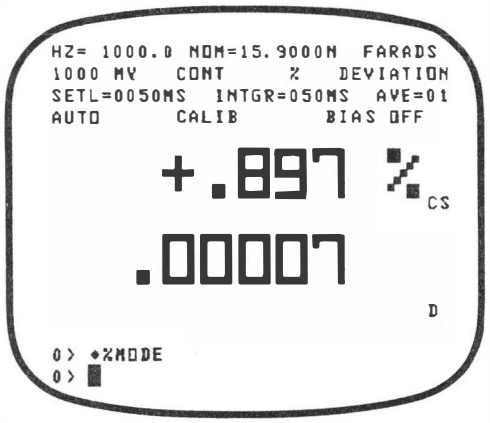	Display percent deviation.

2.6.4 Exit Deviation Mode

To exit from the deviation mode, push <DIR>. The instrument will revert to the direct (normal) display mode. The top measurement reading will again display the calculated value of the device under test.

Example: Continuing with the examples above, return to the direct measurement mode.

Push	Display	Comments
	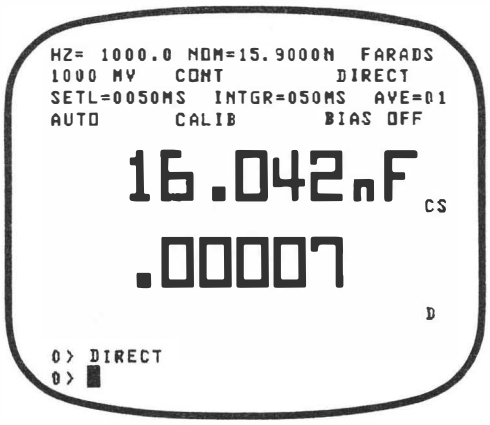	Exit deviation mode.

2.7.1 Status Display

The Status display is used to set limits for SORT and GO/NO-GO displays. To enter this display, push <STAT> key. The status display consists of eleven accept bins (01-11), one main reject bin (00) and one loss element reject bin (REJ). Each bin has a lower limit value, an upper limit value, and a component counter. To switch from any display mode to the status display, push <STAT>. To switch back from status display to the previous display mode, push <STAT> again.

Example:

Push	Display	Comments
	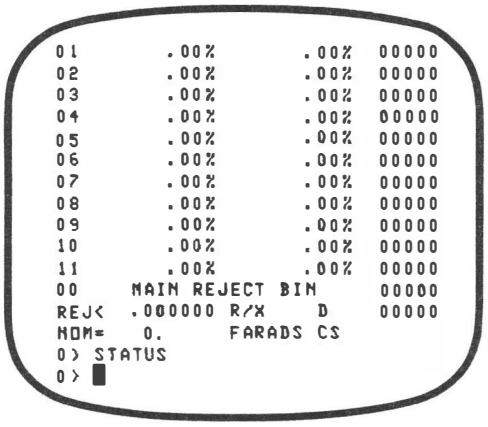	Status display format.
	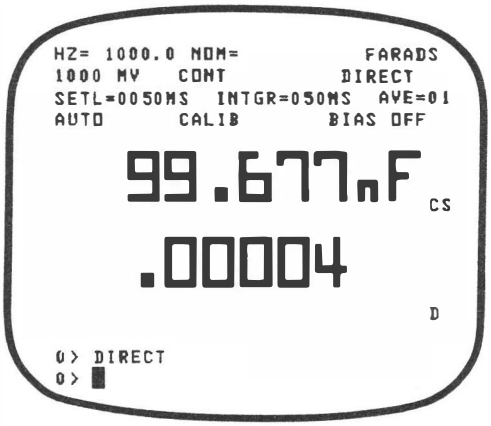	Return to previous measurement display.

The display also contains the programmed nominal value, units, and function for bins 0-11, and the units, component counter, and function for the reject limit. The priority for limits comparison is to compare a measured value first against the minor component limit, then against each individual bin limit from top to bottom on the display, i.e. REJ, 01-11, 00.

2.7.2 Programming Limits

Limits may be set in absolute units or as percent deviations from the nominal value. When instrument power is applied, the 2150/2160 is in the percent limits mode. Each bin is defined by an upper and a lower limit. If only one value is entered when selecting limits for a bin, the VideoBridge assigns the positive value of the entry as the upper limit and the negative value of the entry as the lower limit. If two different values are entered as limits for a bin, the lower value is assigned as the lower limit and the higher value is assigned as the upper limit.

> **NOTE:** Percent limits mode MUST have a nominal value set or else BIN 0 will always be selected. Absolute limits mode does not require a nominal value.

In either the absolute or percent mode, there are two methods of programming bin limits--"nested" and "sequential". In nested binning, the limits for each bin are set around the nominal value. Since the VideoBridge checks bins in order from 1 to 11, the span of limits must be increasingly larger for each succeeding bin. (Example: Bin 1 = -1%, 1%; Bin 2 = -2%, 2%; Bin 3 = -5%, 5%; etc.)

In sequential binning, the limits for each bin are not set around the nominal value. This method is more flexible and allows separation of high values from low values. (Example: Bin 1 = -5%, -3%; Bin 2 = -3%, 0%, Bin 3 = 0%, +5%; Bin 4 = +5%, +10%; etc.)

To set values for bins 0-11, push:
<number> (representing the first limit value), <ENTER>,
<number> (representing the second limit value), <ENTER>,
<number> (representing the bin in which the limit will be entered),
<blue> <BIN#>.

For nested binning, positive and negative values of the same percent value (i.e. +/- 1%) for any bin are entered by pushing <value> <ENTER> <desired bin #> <blue> <BIN #>.

Example: Set bins 1-3 for limits of +/- 5%, +/- 10%, +/- 20%.

Push	Display	Comments
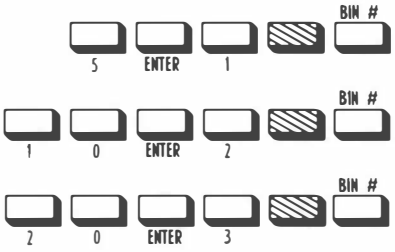	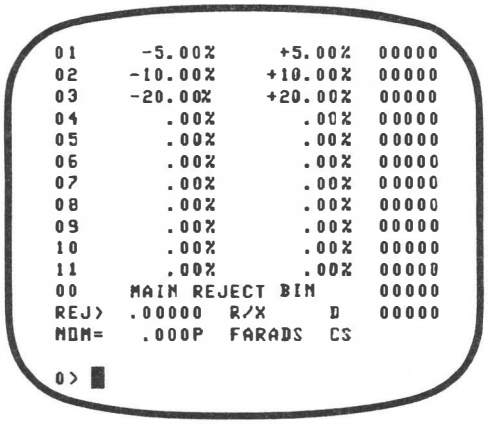	If only one value is entered per bin, the VideoBridge assumes symmetrical limits for that bin.


```
01     -5.00%     +5.00%  00000
02    -10.00%    +10.00%  00000
03    -20.00%    +20.00%  00000
04       .00%       .00%  00000
05       .00%       .00%  00000
06       .00%       .00%  00000
07       .00%       .00%  00000
08       .00%       .00%  00000
09       .00%       .00%  00000
10       .00%       .00%  00000
11       .00%       .00%  00000
00    MAIN REJECT BIN       00000
REJ>  .00000  R/X     D     00000
NOM=   .000P  FARADS  CS

0>
```

Example: Set bin 1 for limits of -20%, +80%.

Push	Display	Comments
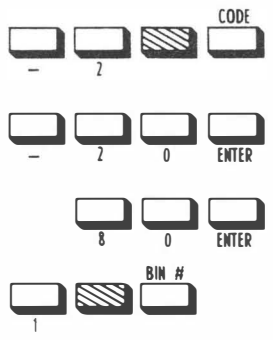	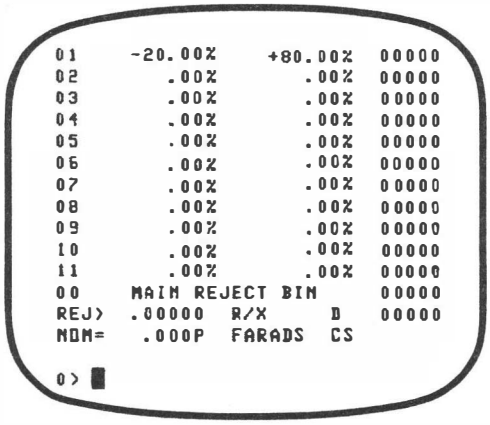	Asymmetrical bin limits are entered in percent mode.


```
01    -20.00%    +80.00%  00000
02       .00%       .00%  00000
03       .00%       .00%  00000
04       .00%       .00%  00000
05       .00%       .00%  00000
06       .00%       .00%  00000
07       .00%       .00%  00000
08       .00%       .00%  00000
09       .00%       .00%  00000
10       .00%       .00%  00000
11       .00%       .00%  00000
00    MAIN REJECT BIN       00000
REJ>  .00000  R/X     D     00000
NOM=   .000P  FARADS  CS

0>
```

The preceeding examples used nested limits in percent mode.

To program absolute value limits, push <blue> <ABS> to put the instrument in absolute mode.

Example: Set bins 1-6 for sequential limits above and below 100nF.
BIN 1 = 80-90nF BIN 2 = 90-95nF BIN 3 = 95-100nF
BIN 4 = 100-105nF BIN 5 = 105-110nF BIN 6 = 110-120nF.

Push

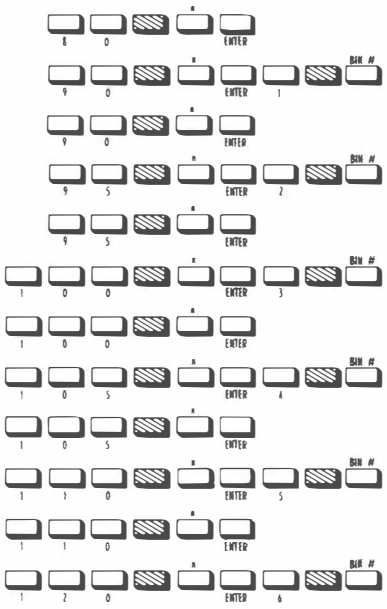

Display

```
01  80.0000N    90.0000N    00000
02  90.0000N    95.0000N    00000
03  95.0000N   100.000N     00000
04 100.000N    105.000N     00000
05 105.000N    110.000N     00000
06 110.000N    120.000N     00000
07    .000P       .000P     00000
08    .000P       .000P     00000
09    .000P       .000P     00000
10    .000P       .000P     00000
11    .000P       .000P     00000
00   MAIN REJECT BIN        00000
REJ> .00000  R/X      D     00000
NOM=  .000P  FARADS  CS

0>
```

Comments

Bins may be programmed in any order. Limit sequences for consecutive bins do not need to be adjacent. However, they should not overlap.

Remember to enter the units multiplier after each limit in absolute mode. No nominal value needs to be set in this mode.

The minor reject limit (REJ) should be set before entering the SORT mode. It is a limit for the minor function (bottom measurement display when in direct display format). Reject limit is set as an absolute value for both absolute and percent mode. To program the reject limit, push:

<number> (representing the limit of minor function)

<blue> <MINOR>.

Example: Set the maximum limit of D (minor parameter) to 0.005.

Push **Display** **Comments**

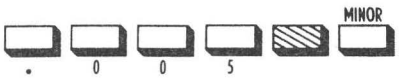

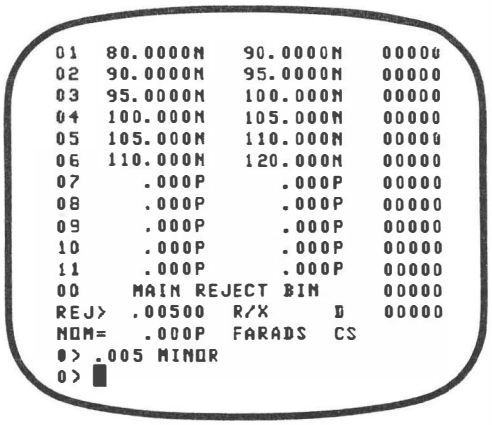

NOTE: If the minor reject limit is set at 0, the minor reject test is ignored.

NOTE: The reject limit is either a maximum or a minimum value depending on the measurement function of the bottom display on the CRT. Maximum or minimum is displayed as:

Rej > = Maximum Limit (all functions except G, B, Y, and Q)

Rej < = Minimum Limit (G, B, Y, and Q)

2.7.3 Bin Counters

Adjacent to each of the bins (0-11 and REJ) is a five-digit counter. The counter records the number of components that fall within the limits for each bin. During the sorting operation, the counter will record up to 65,225 parts for each bin. To view the counters and to stop the sorting operation, push the STAT key. To restart the sorting operation, push SORT. The bin counters for all bins (0-11 and REJ) are reset to zero by programming test code 2. Also, changing the nominal value also resets bins 0-11, while changing the minor reject limit resets bin REJ.

NOTE: Bin counts are only incremented in the single measurement mode.

2.7.4 Sort Mode

Component sorting is always active in single measurement mode. To ensure accurate sorting to the desired bins, all test parameters and limit values must be set before entering the sort mode. When the SORT and SGL keys are pushed, the display indicates BIN number for each component measured (BIN R = minor reject). The appropriate Handler relay is activated if the Handler Interface is installed.

Activating the Handler relay allows testing the Handler setup before actual sorting begins. The Handler setup is checked by using the CONTINUOUS measurement mode. The CONTINUOUS measurement mode can be used to measure results without incrementing the bin count. Figure 2-12 is a sorting mode preparation check list.

NOTE: The bin counter is always active when in the single measurement mode, regardless of the status of the sort mode. It is also active under other displays -- GO/NO-GO, % DEV, ABS DEV. If no bin limits are set when a component is measured in single mode, it will be binned as a major reject (BIN 0).

TEST PARAMETERS (Direct Display)

☐ Press <DIR>

SET:
- ☐ Top Display Function
- ☐ Bottom Display Function
- ☐ Frequency
- ☐ Signal Level
- ☐ Settling Time
- ☐ Integration Time
- ☐ Number of Averages

} ☐ Speed (FAST, MED, SLOW)

- ☐ Calibrate Clips/Fixture
- ☐ Range HOLD or Auto Range

BINNING LIMITS (Status Display)

☐ Press <STAT>

SET:
- ☐ Major Limits for Bins 0 - 11
- ☐ Minor Reject Limit (REJ)
- ☐ Nominal Value (required for % mode)
- ☐ Select SORT or Handler Mode
- ☐ Press <SGL> to begin sorting

Figure 2-12. Sorting Mode Preparation Checklist

To enter the sort mode, push <SORT>. Entering the sort mode sets the instrument to the single measurement mode. Measurements are initiated by either pushing the SGL key or receiving a remote start signal.

In SORT mode, the word BIN and a number are displayed. The number represents the bin into which the component was sorted. If the component exceeds the REJ limit, the display will read BIN R.

NOTE: Programming test code 26 displays top and bottom display measurements along with BIN # while in SORT (see section 2.7.6).

Example: Continuing with the preceding examples, enter the sorting mode and make several measurements.

Push	Display	Comments
SORT SGL SGL SGL	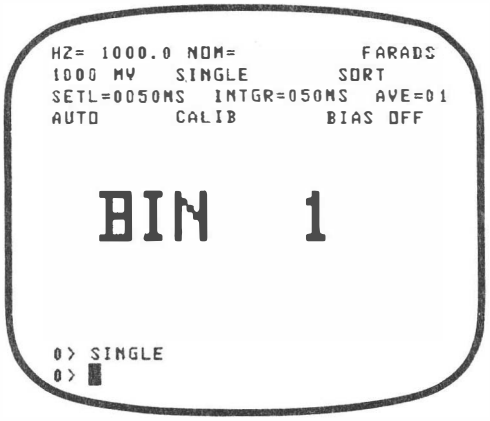	Initiate sort mode measurements by pressing SGL key.
STAT	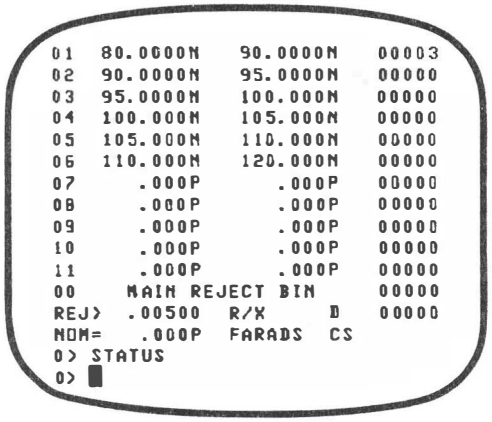	Check the status display and note bin counter totals. Adding totals from all bins indicates number of measurements taken.

To view the bin status, push STAT key. When the STAT key is pushed and the bin status is being displayed, the sorting function is still active. The nominal value and all limits are left intact. To return to the sorting display, push SORT key. The bin counters will continue to increment from their previous totals.

2.7.5 Component Sorting Example

This example is to illustrate the concepts presented in this portion of the manual. It is a typical setup, starting from the instrument power ON condition. Sort 100nF capacitors into tolerance bands of +/- 1%, +/- 5%, +/- 10%, +/- 20% with a maximum limit on D of 0.005. Other test parameters include: frequency--1kHz, signal level--1000mV RMS, measurement speed--MED, test fixture--calibrated (CALIB).

After all parameters are programmed and the test fixture has been calibrated (see Section 2.3.5), the example will show how to start the sorting operation, stop sorting to look at the bin counters, and restart the sorting operation. The example will end by showing how to exit the sorting mode and return to direct mode.

Example:

Test Parameter Setup

Push	**Display**	**Comments**
	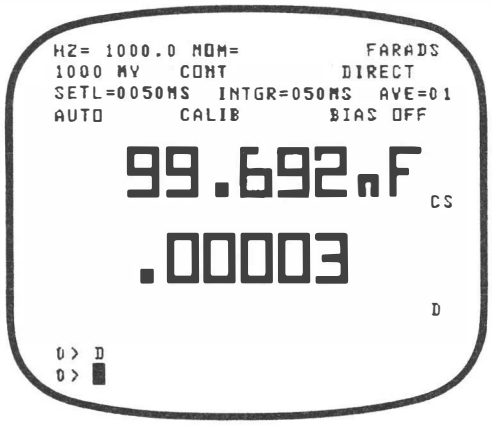	Go to direct display. Set measurement functions.

NOTE: In this example, test frequency, signal level, settling time, integration time, measurement averaging, and % mode did not need programming because the 2150/2160 initialized to these functions when power was applied.

Limits Setup

Push

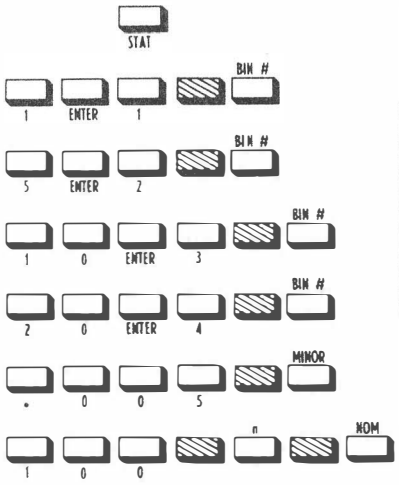

Display

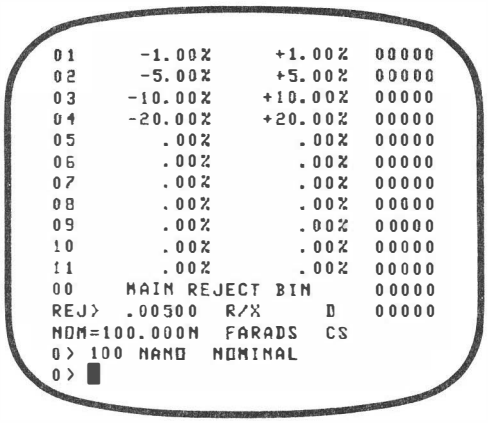

Comments

Limit values must be set in ascending order from Bin 1 to Bin 11. Within each bin, the VideoBridge will enter +/- per cent limits for each value entered.

Begin Sorting Operation

Push

Display

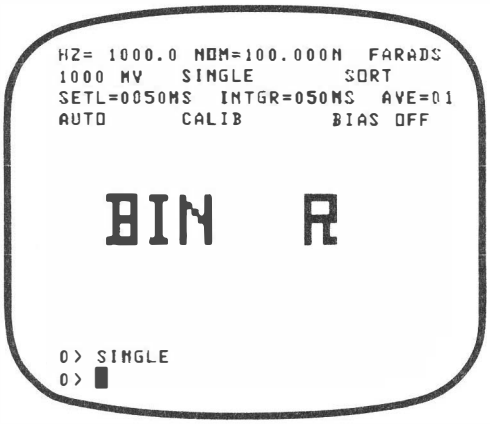

Comments

Components exceeding the minor reject limit will display BIN R.

View Bin Counters

Push	Display	Comments
STAT	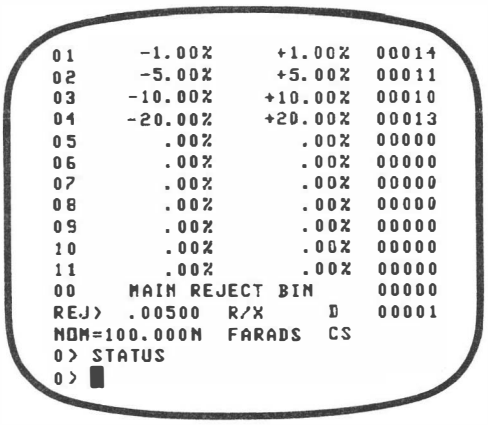	Exit sort display. Note binning distribution. Remember that sorting is still active in this display.

Return to sort display and resume sorting

Push	Display	Comments
SGL	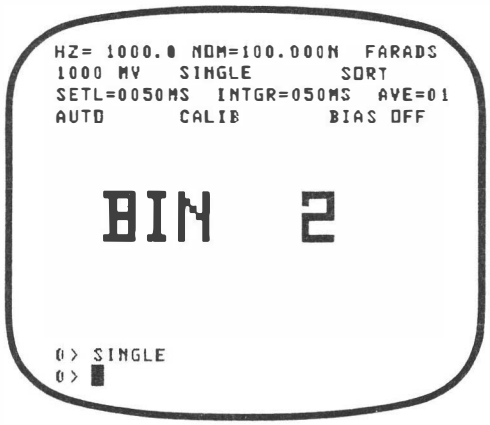	Re-enter sort mode and increment counters.

Clear Bin Counters

Push	Display	Comments
	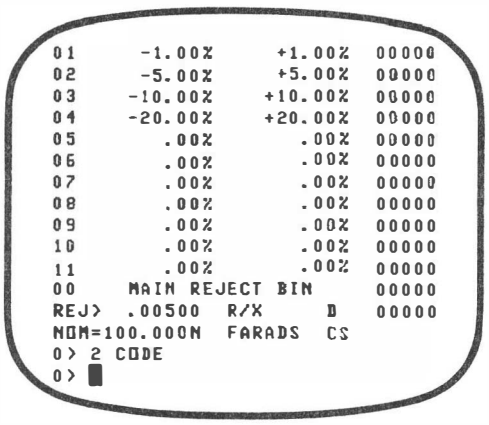	Return to status display. Enter 2 CODE to reset all bin counters to zero.

NOTE: To reset all counters to zero as well as clear all bin limits, program -2 CODE.

Component Sorting Summary:

- Consult the Sorting Mode Preparation Checklist in Figure 2-12 before sorting. If no limits are set, operating in SINGLE measurement mode will bin the part as a major reject.
- The bin counters only work in SINGLE measurement mode.
- Binning in percent mode requires a nominal value. Absolute value limits do not require that a nominal value be set.
- To clear all bin counts, program 2 CODE. To clear all bin counts and bin limits, program -2 CODE.
- The span of "nested" bin limits must widen as bin numbers increase. The higher the bin number, the wider the span of limits must be compared to the span of the previous bin.
- Bin counts are updated with Non-Volatile Memory (Section A.3).

2.7.6 Handler Mode

<8> <blue> <CODE> - Disables CRT display for use with the Handler Interface option and locks the keyboard. This code provides fastest VideoBridge measurement speed for handler operation. The display clears and shows "Now In Handler Mode". To deactivate 8 CODE, momentarily ground Pin 21 of the Handler Interface Card's rear panel connector. For more information on handler operation, see section A.1.

<-> <8> <blue> <CODE> - Displays the BIN number in large display characters, measured values in small characters and locks the keyboard for use with the Handler Interface option (see Figure 2-13). Display update increases measurement time by about 110ms compared to normal handler operation. Use of peripheral devices (such as a printer) also increases measurement time. Deactivate -8 CODE in the same manner as -8 CODE. Both 8 CODE and -8 CODE put the VideoBridge into SINGLE mode.

> **NOTE:** Neither 8 CODE nor -8 CODE can be saved in Non-Volatile Memory (see Section A.3).

<2> <6> <blue> <CODE> - When in SORT mode, 26 CODE displays the top and bottom display values in small characters (see Figure 2-13). The appropriate bin relay is activated if the Handler Interface is installed. The BUSY signal is not asserted in this mode. The keyboard is not locked under this mode. This mode is cleared by -26 CODE.

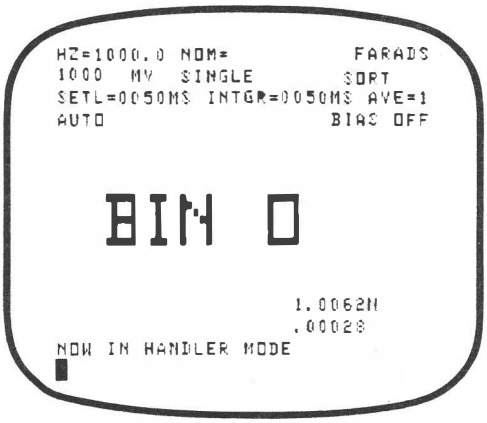

Figure 2-13. -8 CODE and 26 CODE Display Format

2.7.7 Binning Priority

Test Code 15 redefines the binning priority of the VideoBridge for capacitor testing.

NOTE: MAJOR — as used in the following discussion means the primary, or reactive element of the unknown, C. The MAJOR value is the top display function.

MINOR — as used in the following discussion means the secondary, or loss function of the unknown, D. The MINOR value is the bottom display function.

The normal (default at power up) bin priority selection is as follows:

REJ — Does part fail as a MINOR reject? If yes, select BIN REJ.

BINS 1-11 — If no, does part's MAJOR value fall into an accept bin? If yes, select appropriate BIN.

BIN 0 — If no, part fails as a MAJOR reject. Select BIN 0.

Under the above selection process, all High D parts are sorted as minor rejects. Since open-circuit parts will be measured as high D and low C, they would normally be binned as D rejects. 15 CODE provides an additional measurement on parts detected as D rejects rather than immediately binning them as Bin REJ. When 15 CODE is entered, the VideoBridge continues to test a D reject part against the bin limits. If the measured C value of the part does not fall within the limits of a programmed bin, it is sent to Bin 0 (MAJOR reject). If the measured C value of the part does fall within the limits of a programmed bin, it is sent to Bin REJ (MINOR reject).

Test Code 15 redefines binning priority to the following:

REJ	Does part fail as a MINOR reject? If yes, does part's MAJOR value fall into an accept bin? If yes, select Bin REJ. If no, select Bin 0.
BINS 1-11	If no, does part's MAJOR value fall into an accept bin? If yes, select appropriate BIN.
BIN 0	If no, part fails as a major reject. Select BIN 0.

To use, push <1><5> <blue> <CODE>. To clear this mode and return to normal bin selection priority, push <-> <1> <5> <blue> <CODE>.

NOTE: The status of 15 CODE is not indicated on the CRT.

2.7.8 GO/NO-GO Mode

The GO/NO-GO mode takes advantage of the CRT display during hand sorting operations. When in the GO/NO-GO mode, the words "PASS" and "FAIL" appear on the CRT. If no minor limit is set, components which would normally fall into BIN 1 will cause the left side of the screen to illuminate under the word "PASS." If a minor limit is set, the component must pass both this limit and the Bin 1 limit for a "PASS" condition. All other BIN decisions will cause the right side of the screen to illuminate under the word "FAIL."

The GO/NO-GO mode operates in either CONTINUOUS or SINGLE measurement mode. However, the BIN counter is active only when in the SINGLE mode.

To enter the GO/NO-GO mode, push <2> <1> <blue> <CODE>. To exit this mode, enter any other measurement mode, e.g. DIRect, DEViation, SORT.

Example: From initial power up, set test parameters of: Nominal Value = 1nF, BIN 1 limits = +/- 10%, Dissipation reject limit = 0.1. Calibrate the test fixture. Connect a part of the value to be measured. Enter FAST and Range HOLD for maximum testing speed.

Push	Display	Comments
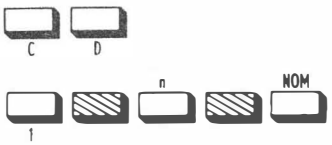	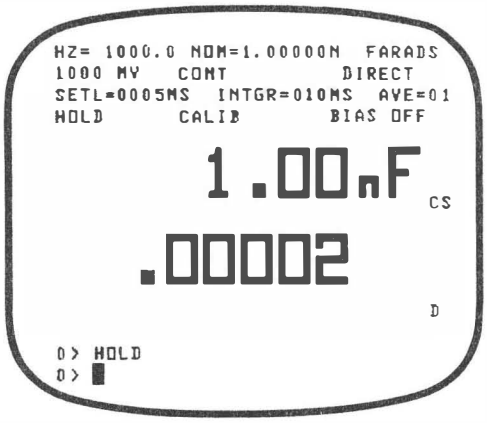	Entering Range HOLD exits Auto LRC. Set nominal value to 1nF.
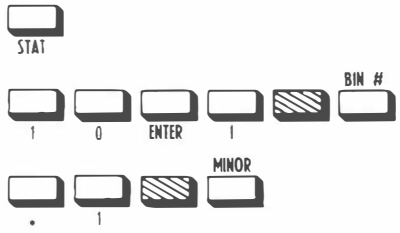	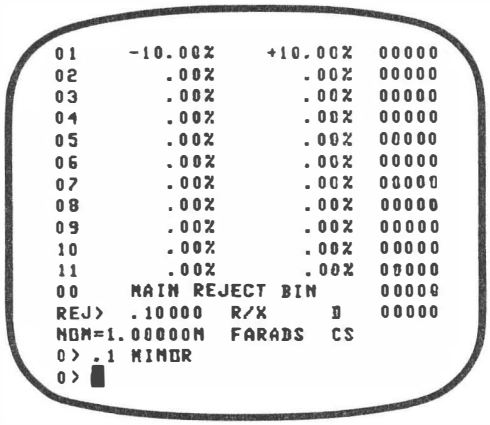	Set BIN 1 to +/-10% of the nominal value and REJ > 0.1 D.

Push	Display	Comments
	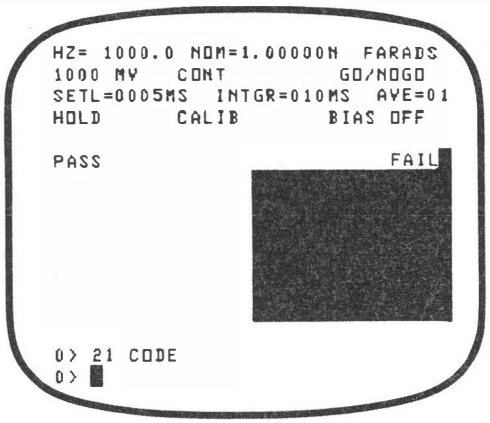	Enter GO/NO-GO mode. This setup condition is indicated by the words "GO/NO-GO", "PASS" and "FAIL" on the CRT display. "FAIL" will be indicated when no part is connected.

The GO/NO-GO mode is often used in continuous mode. However, to use bin counters, the SGL key or the footswitch must be pressed. Measure several parts by pressing <SGL>.

Push	Display	Comments
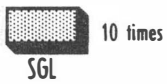	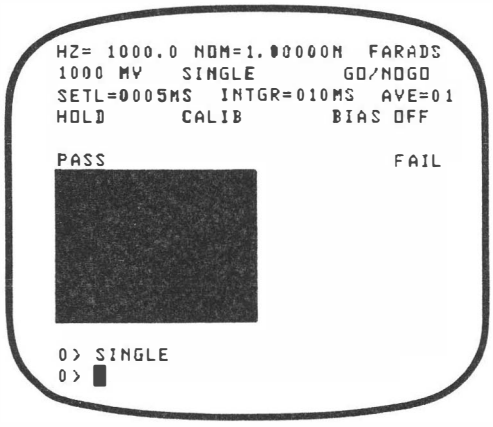	10 measurements are made in single mode, each indicating a PASS condition.

Push	Display	Comments
	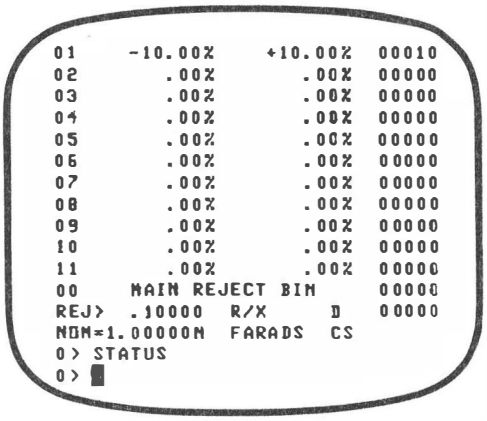	Pressing the STAT key displays BIN STATUS counters.

To continue testing with GO/NO-GO display, enter 21 CODE. The bin counters will continue to increment. To clear counters, enter 2 CODE before entering 21 CODE (see Section 2.7.5).

Push	Display	Comments
	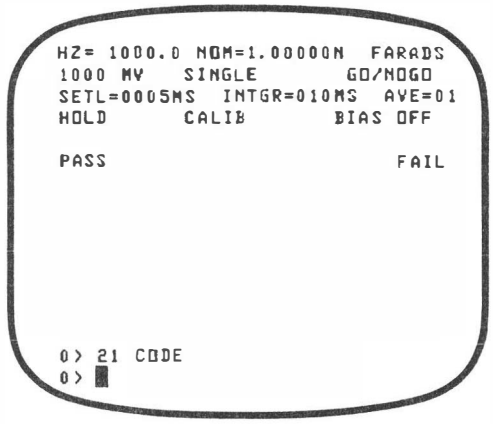	Re-enter GO/NO-GO Mode.

Exit GO/NO-GO mode by selecting another display mode: SORT, DIRect, DEViation.

2.7.9 Outputs Connector Wiring

The order of outputs via the output connector on the Handler Interface card is listed in Table 2-8 (for more information on Handler Interface operation, see Section A.1).

Table 2-8. VideoBridge Outputs Connector Wiring

PIN NUMBER	FUNCTION
1	COMMON
2	BIN 0
3	BIN 1
4	BIN 2
5	BIN 3
6	BIN 4
7	BIN 5
8	BIN 6
9	BIN 7
10	BIN 8
11	BIN 9
16	BIN 10
17	BIN R
15	BIN 11 (EOC)
12*	+5V (SYSTEM) OUT
13*	SYSTEM GROUND
14	START IN
18	BUSY OUT
19	BUSY COM
20	START COM
21	KEYBOARD UNLOCK

*ESI recommends that Pin 12 (+5V OUT) and Pin 13 (SYSTEM GROUND) not be used. Noise introduced into the Model 2150/2160 through these connections may affect measurements results.

NOTE: Pin 17 is Bin R which is the REJ bin.

NOTE: Pin 15 (Bin 11) is used for the End of Conversion (EOC) signal when test code 16 is entered. THIS MAKES ONLY 10 ACCEPT BINS AVAILABLE INSTEAD OF 11. When the EOC feature is cleared (-16 CODE), Bin 11 is again available. Do not use 16 CODE unless Bin 11 limits have been set to zero.

2.8 MEASUREMENT SPEED

Overall Measurement Speed consists of three main parts: Measurement Time, Calculation Time, and Display Time.

In SINGLE mode, overall measurement speed is the sum of all times.

In CONTINUOUS mode, the calculation of the previous measurement is done during Measurement Time, which increases speed. Overall measurement speed is the larger of either [measurement time + 5ms] or [calculation + display time + 5ms].

Overall measurement speed can be found by using the formula:

Overall Measurement Speed = Measurement Time + Calculation Time + Display Time

Where: Measurement Time = [# of Sample Times + Settling Times] x # of Measurements Averaged

Calculation Time = 75ms

Display Time = 110ms Direct display
50ms Sorting display

All measurements and calculations are driven by various phases of the 7.68MHz clock signal from the motherboard. Test frequencies can interact with synchronizations of this clock and cause variations in several measurement speed elements: Settling Time, Integration Time, Tailoff Time, and Linelock Time.

These variations show up as discrepancies between values entered and values displayed (usually about 3-5ms). As a result, all stated measurement speeds are approximate--the methods and formulas for determining exact speeds are beyond the scope of this manual.

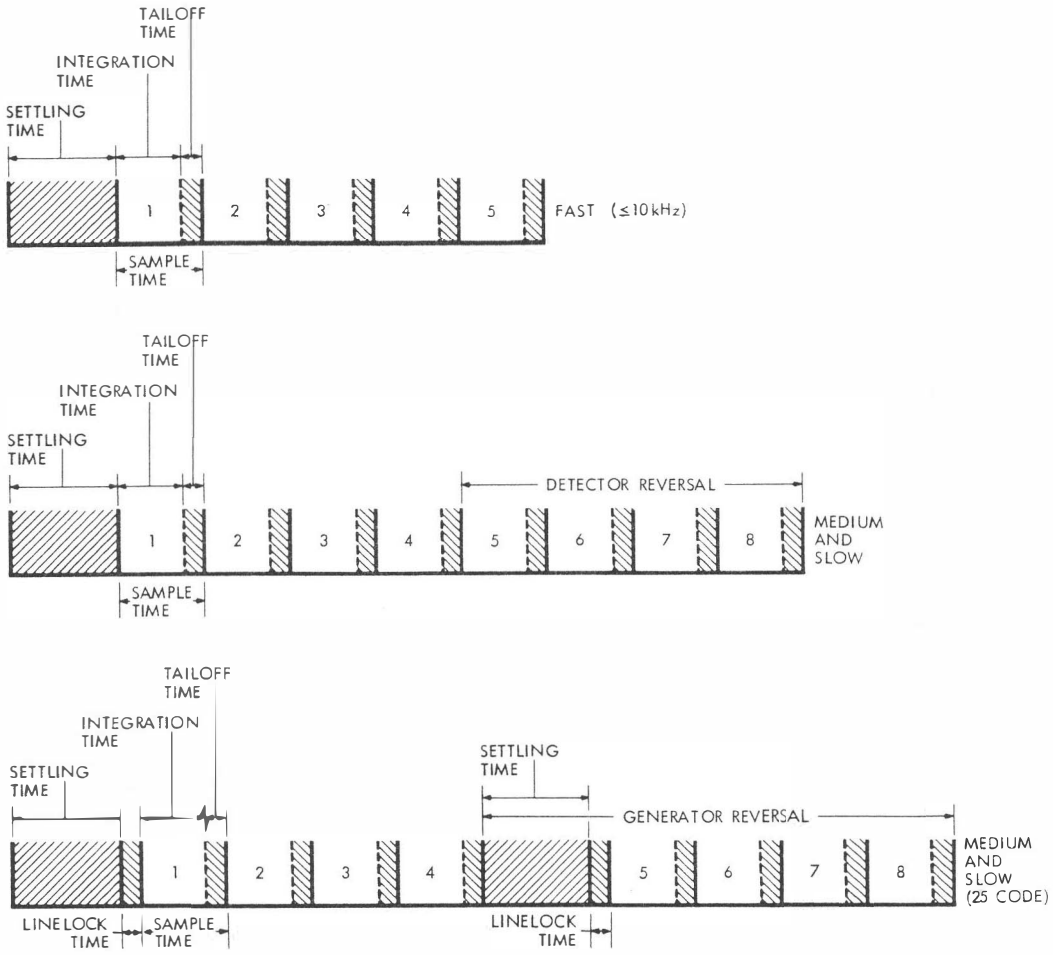

Figure 2-14. Detector and Generator Reversal Measurement Sequences

Settling Time is the time required for the analog voltage representing the unknown to settle to the desired accuracy. Settling times between 2ms and 1500ms can be programmed in 1ms steps. Settling time values are dependent on the type of component being tested and/or requirements of externally connected equipment. Typically, smaller impedances require longer settling times.

Integration Time is the combined periods of test frequency cycles during which the A/D converter is making the measurement. Integration time is one of three measurement time elements that can be programmed (Settling Time and Number of Averages are the others). Values for Integration Time may be programmed within the following range:

$$2ms \leq I.T. \leq 600ms$$

See Section 2.8.2 for more information on determining integration time.

Tailoff Time is the fixed portion of measurement time which is set at approximately 5ms. During tailoff time the A/D converter is brought to zero, and the coarse and fine counters are accumulating measurement data. Due to variations caused by the synchronization of internal timing, tailoff time can range from 4ms to 6ms (see Sample Time).

Sample Time is Integration time + 4ms of Tailoff time rounded to the next higher even number. For example, 27.5ms + 4ms = 31.5ms ⟶ 32ms.

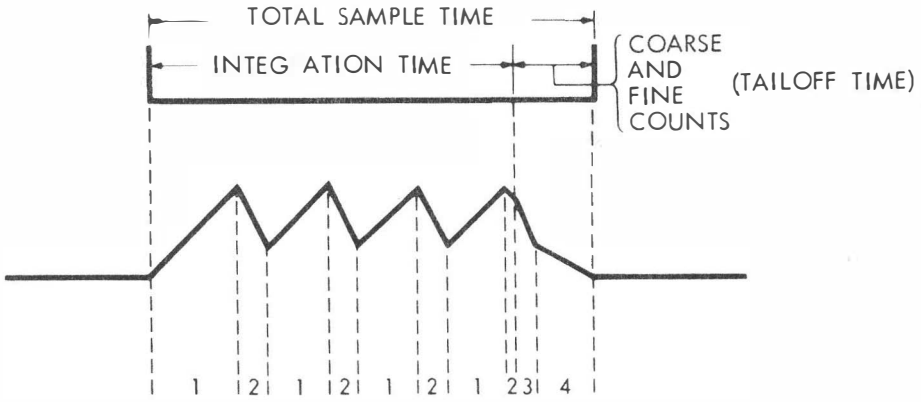

1 = Integration on measured signal.

2 = Integration on mixture of measured and reference signal. Coarse counter sums these periods.

3 = Integration on reference signal only. Coarse counter sums this with previous periods.

4 = Integration on fine reference. Fine counter monitors this period adding its count to the coarse counter total (1 coarse count = 1024 fine counts).

Figure 2-15. Sample Time

Detector Reversal is the sinewave detector reversing polarity after the fourth sample time. The second series of measurements are made in the opposite polarity. These two series of measurements are algebraically added (i.e. (1-5) (2-6), (3-7), (4-8)), to cancel offset voltages in operational amplifiers and synchronized line related pickup. Neither linelock time nor additional settling time is required for this measurement method.

Generator Reversal (below 200Hz) is the sinewave generator reversing polarity after the fourth sample time with settling time and linelock time added before the first and fifth sample times. It is enabled by programming 25 CODE--the VideoBridge will perform generator reversal below 200Hz and switch to detector reversal at or above 200Hz. Cancellation of op amp offsets is the same as for detector reversal.

FAST Measurement Mode is enabled by pressing the <blue> and <FAST> keys. This puts the VideoBridge in its fastest preset measurement mode by performing an altogether different sample routine. The normal VideoBridge reversal routine compares the first four integration measurements of the unknown and standard against opposite polarity measurements of the unknown and standard. In FAST mode, the VideoBridge compares the first four measurements of the unknown and standard against a zero reference measurement (to ground). Measurements are subtracted from this reference instead of from opposite polarity measurements. This requires less time (five sample measurements are taken instead of eight -- see Figure 2-16), while still providing adequate offset cancellation.

> **NOTE:** Five measurements are taken only when the test frequency is at or below 10kHz. Above 10kHz, eight measurements are taken to improve the signal-to-noise ratio.

Linelock Time (generator reversal only) is the average time for the line frequency to reach the zero crossing point with a positive-going slope. Linelock time is added to settling time for test frequencies between 20Hz and 200Hz. Linelock time can vary, depending on the phase relationship at any given time of generator reversal to line frequency. Worst case is the period required for two complete line voltage cycles (one per half measurement sequence, or 33ms total at 60Hz). For test frequencies above 200Hz, linelock time is zero.

> **NOTE:** Linelock time for 50Hz line frequency is 20ms per half measurement (40ms for one full measurement sequence).

Measurement Time is the total time from start to end of a measurement sequence. For generator and detector reversal, integrations 5 through 8 are made with the generator/detector polarity reversed.

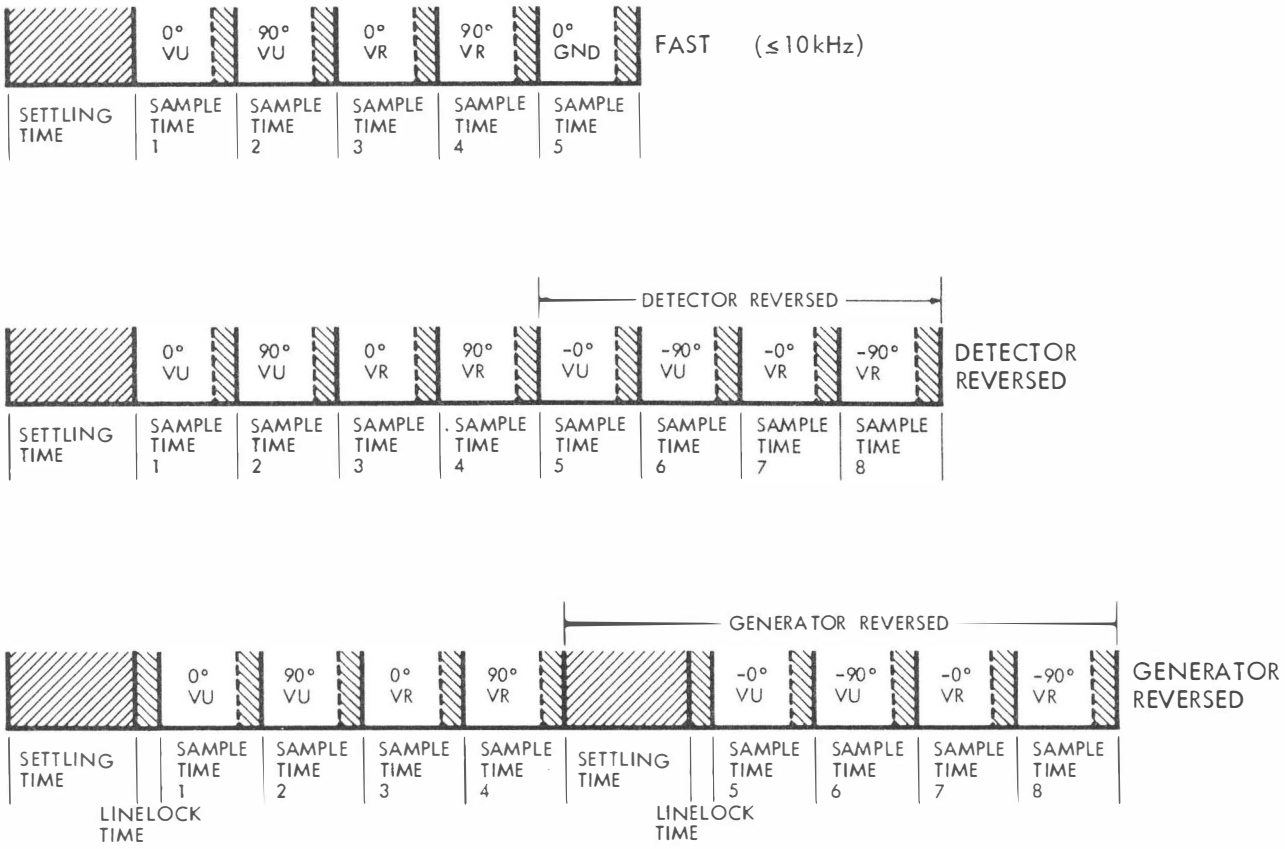

Figure 2-16. Measurement Cycles

Formula Summary

Generator Reversal = 8(sample) + 2(settling) + 2(linelock)
Detector Reversal = 8(sample) + 1(settling)
FAST (≤ 10kHz) = 5(sample) + 1(settling)
Sample time = Integration time + tailoff
Tailoff time = 4ms to 6ms per sample
Linelock time = 16.7ms (60Hz line frequency)
= 20ms (50Hz line frequency)

Measurement Averaging is n x (measurement time) Where: n is an integer between 1 and 20 (see Figure 2-17). Measurement averaging is the third measurement time element that is operator programmable (along with settling time and integration time). Averaging reduces noise in the readings by adding a selected number of measurement results and dividing by the number of measurements. The process is the same at any frequency.

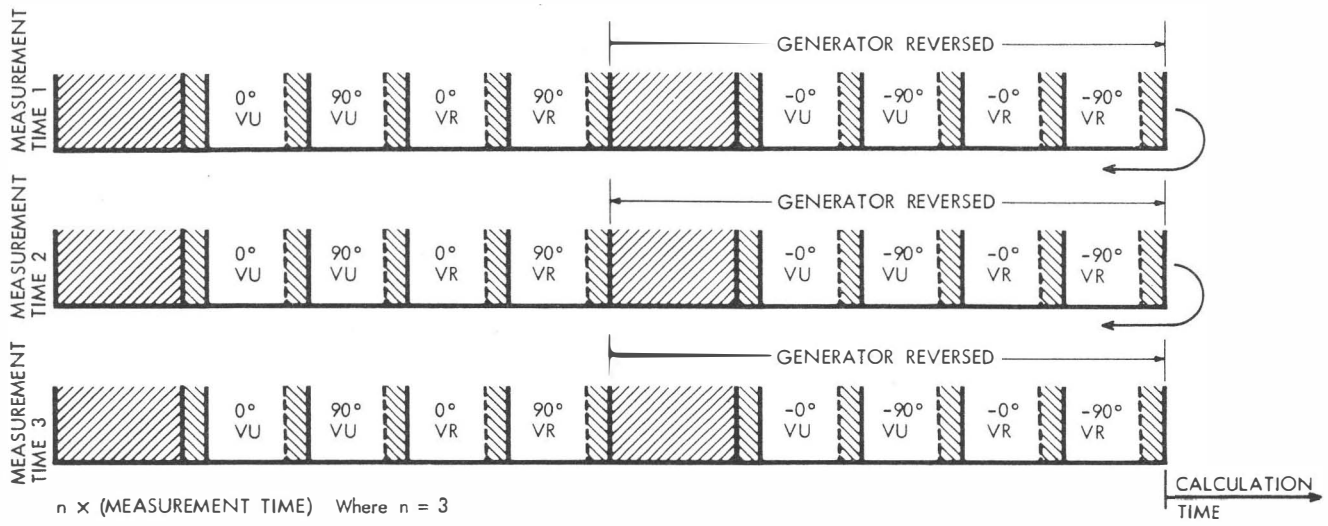

Figure 2-17. Measurement Averaging (Generator Reversal)

Where: VU = Voltage across unknown (device-under-test)
VR = Voltage across range resistor

Calculation Time is the time required to calculate display information from the raw measured data (approximately 75ms).

Display Time is the time required to display results on the CRT (approximately 110ms in DIRect, 50ms in SORT).

In addition, VideoBridge options (GPIB, RS-232C, Handler Interface) also affect Overall Measurement Speed:

For GPIB measurements, add 350ms per measurement in FAST and SLOW modes, 400ms in MEDium to standard VideoBridge measurement speeds.

For RS-232C measurements, use the baud rate set at the factory (9600) and range HOLD to achieve optimum measurement speeds.

The VideoBridge with Handler Interface option can be programmed to operate without display (test code 8). Eliminating display saves up to 110ms per measurement. By selecting FAST mode along with minimum Integration and Settling times of 2ms, the VideoBridge with Handler Interface can make up to 9 measurements per second. Refer to Section A.1 of this manual for more information on Handler Interface timing.

NOTE: All speeds listed are approximate. Specified times may vary by 3-5ms due to internal clock synchronization.

Meaningful determination of measurement speed depends on specifying the following conditions:

1) test frequency
2) integration time
3) settling time
4) number of averages
5) display mode
6) test signal
7) value of component-under-test
8) baud rate (if applicable)
9) FAST vs. MEDium vs. SLOW
10) single vs. continuous
11) range hold vs. auto range
12) bias on vs. bias off

FAST/MED/SLOW selection sets initial integration time, settling time, and number of averages. These may be used as is, or they may be reset to any desired level (see Section 2.8.1).

Table 2-9. Preset Measurement Speeds

	DIRECT	SORT and GO/NO-GO	HANDLER*
FAST	~4 measurements/second	~11 measurements/second	~6/second ~9/second**
MEDIUM	~2 measurements/second	~2 measurements/second	~2 measurements/second
SLOW	~5 seconds/measurement	~5 seconds/measurement	~5 seconds/measurement

*Single mode only, 8 CODE enabled
**2ms SETL, 2ms I.T., frequency ≥500 Hz

These measurement speeds are typical under the following conditions:

frequency = 1kHz
I.T. = determined by FAST/MED/SLOW
SETL = determined by FAST/MED/SLOW
AVG = determined by FAST/MED/SLOW
display mode = see table
test signal = 1000mV
value of component-under-test = 1nF
baud rate = 9600 (if using RS-232C)
FAST/MED/SLOW = see table
measurement mode = continuous (unless indicated as single)
ranging status = HOLD
bias = OFF

The following examples illustrate how to calculate measurement times under different test conditions.

Example: Speed for measuring a 1nF capacitor in single measurement mode, MEDium preset measurement time selected (SETL = 50ms, I.T. = 50ms, and AVG = 1), DIRect display mode, Range HOLD, bias OFF, 1000mV, 1kHz, is calculated as follows:

Integration time	=	50ms
Tailoff time	= +	5ms
SAMPLE TIME (TOTAL)	=	55ms x 8 = 440ms
Linelock time	=	0ms (frequency above 200Hz)
Settling time	= +	50ms
(TOTAL)		50ms x 1 = 50ms (Detector Rev.)
Measurement time	=	490ms [8(55) + 1(50)]
Measurements averaged	= x	1
Total Measurement time	=	490ms
+ Calculation time	= +	75ms
+ Display time	= +	110ms (Normal display)
= Measurement speed	=	675ms

Example: Conditions for fastest available measurement speed -- same as above except: FAST mode, SETL= 2ms, I.T.= 2ms, AVG = 1, handler interface with 8 CODE.

Integration time	=	2ms
Tailoff time	= +	5ms
SAMPLE TIME (TOTAL)	=	7ms x 5 = 35ms
Linelock time	=	0 (frequency above 200Hz)
Settling time	= +	2ms
(TOTAL)	=	2ms x 1 = 2ms (Detector Rev.)
Measurement time	=	37ms [35ms + 2ms]
Measurements averaged	= x	1
Total Measurement time	=	37ms
+ Calculation time	= +	75ms
+ Display time	= +	0ms (8 CODE, no display)
= Measurement speed	=	112ms = 9 measurements/second

2.8.1 Programming Measurement Speed

Three pushbuttons program preset combinations of measurement time elements as FAST, MEDium, or SLOW. Each selection fixes a different combination of integration time, settling time, and number of measurement averages. However, any preset combination can be overridden by programming a different integration time, settling time and/or number of averages. MEDium speed is initially selected when power is applied.

Table 2-10. Preset Measurement Parameters

	SETL	I.T.	AVG
Fast	5 ms	10 ms	1
Medium	50 ms	50 ms	1
Slow	50 ms	50 ms	10

To program FAST, MEDium, or SLOW combinations, push the blue key followed by the FAST, MED, or SLOW key.

Example: Set the instrument to SLOW measurement speed.

Push

Display

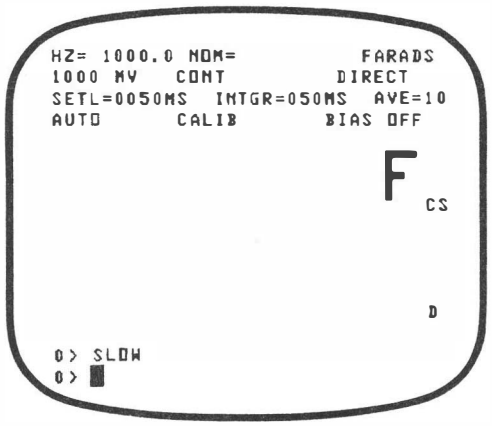

Comments

Measurement speed is changed from MED to SLOW.

NOTE: Above 10kHz, FAST mode reverts to 8 integrations.

2.8.2 Programming Integration Time

Integration time (I.T.) is only a portion of the overall measurement time of the Model 2150/2160. It is the variable portion of sample time (described previously), that is based on the number of cycles of the test frequency. Integration time can be programmed to a maximum of 600ms and to a minimum of 2ms.

As a rule, minimum required integration time increases as test frequency decreases. Also, short integration times are less accurate than longer times and can cause less measurement resolution to be displayed. If an entered time does not allow the instrument to integrate on a number of complete measurement frequency cycles, it is automatically recalculated to the next larger integration time that does (see Table 2-11). This holds true when either integration time or test frequency is changed, or both.

To find the permissible integration times, use the formula:

$$I.T. = \#\ of\ cycles * (period / 60)$$

where: # of cycles = CEILING [programmed I.T. * (60 / period)]

period = FLOOR [60,000/F] for F $\leq$ 10kHz or F = 12kHz, 15kHz, 20kHz, 30kHz, 60kHz.

period = FLOOR [300,000/F] for F > 10kHz (excluding 12kHz, 15kHz, 20kHz, 30kHz, 60kHz).

CEILING = a function where, if the value is a non-integer, round it to the next higher integer. If it is an integer, keep value.

FLOOR = a function where, if the value is a non-integer, round result to the next lower integer. If it is an integer, keep value.

Table 2-11. Integration Time Chart

FREQUENCY		MINIMUM INTEGRATION TIME
500Hz	=	2ms
400Hz	=	3ms
300Hz	=	4ms
200Hz	=	5ms
120Hz	=	16ms
100Hz	=	10ms
60Hz	=	17ms
50Hz	=	20ms
40Hz	=	25ms
30Hz	=	34ms
20Hz	=	50ms

To program integration time, push the numerical keys representing the desired integration time in milliseconds, then push the blue key followed by the I.T. key.

Example: Program integration time based on 10 cycles of the 500Hz test frequency.

period = FLOOR [60,000/500] = 120
# of cycles = CEILING [20 * 60/120] = 10
I.T. = 10 * 120 / 60 = 20ms

Push	Display	Comments
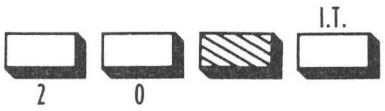	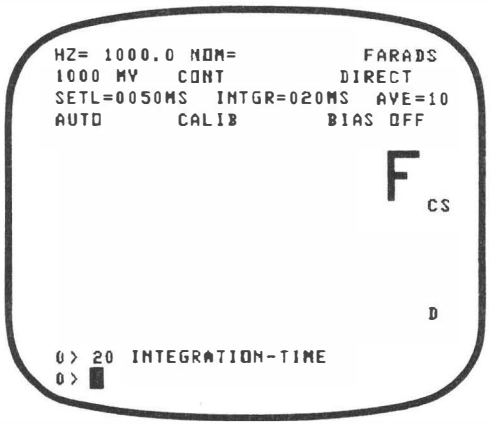	Integration time is entered in milli-seconds.

2.8.3 Programming Settling Time

Settling time, as described above (Section 2.8), is the time required for the analog voltage representing the unknown to settle to stated accuracy. When instrument power is applied, the settling time is at 50ms (MED speed). Settling times can be programmed between 2ms and 1500ms in 1ms steps. To program settling time, push the numerical keys that represent the settling time, in milliseconds, followed by the blue key and the SETL key.

Example: Set settling time to 110 milliseconds.

Push	Display	Comments
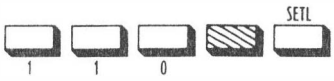	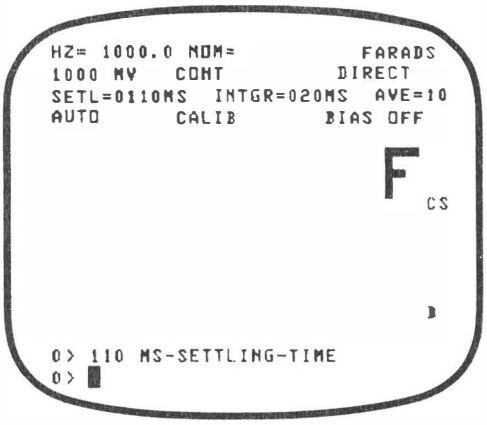	

2.8.4 Programming Measurement Averaging

Measurements made where stray fields introduce noise can result in fluctuating readings. The 2150/2160 can reduce these fluctuations by averaging a specified number of measurements on one device-under-test. The noise is reduced by approximately the square root of the number of measurements averaged. As shown in Section 2.8, the total measurement time for averaging measurements is equal to:

$$n \times (\text{Sample time})$$

Where: n = an integer between 1 and 20

To program a selected number of measurements to be averaged, push the numerical keys representing the number of measurements to be averaged followed by the blue key and the AVG key.

Example: Average 10 measurements and display the results.

Push	Display	Comments
	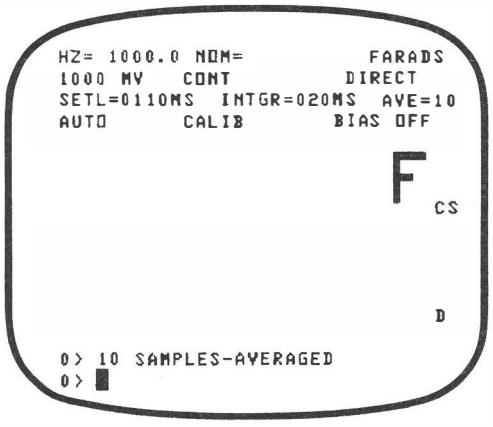	

2.9 CASSETTE TAPE LOADER

The cassette tape loader is a non-volatile, mass storage unit that distinguishes the Model 2160 from the 2150. It uses a certified digital mini-cassette recording tape for saving and reloading instrument measurement-parameter setups. All measurement parameters, binning limits, and bin counter information can be saved, then reprogrammed at a later time. Using a cassette tape saves the time required to reload test parameters and limits at the start of a production run or after a power interruption. For greater efficiency, the Auto Start feature saves even more time and minimizes errors in setup by automatically loading a file at power up (see Section 2.9.5.1).

As stated in Section 2.3.5, zero offset corrections are not stored to tape. However, a setup that has been calibrated may be saved to tape. When that file is loaded, it automatically initiates a calibration, as if <blue> <CAL> were pressed.

Any cassette tape must be properly formatted for use in the 2160. Formatted tapes are available from ESI (P/N 55852) and can be used for immediate storage of data. Tapes can also be formatted by the 2160.

Applications Software Packages are also available for use with the 2160. The extended programming on these tapes analyzes measurement data and provides statistical evaluation or graphic display of results. The STATISTICS (P/N 55104) or ANALOG (P/N 55103) kits can be ordered with the Model 2160 or any time after purchase.

CASSETTE TAPE FUNCTIONS ARE NOT SUPPORTED BY WAY OF OPTIONAL REMOTE DEVICES--GPIB OR RS-232C. DO NOT ATTEMPT TO USE REMOTE COMMANDS TO CONTROL MODEL 2160 CASSETTE OPERATIONS.

2.9.1 Cassette Tape Installation

The mini-cassette tape is installed in the 2160's cassette tape loader as shown in Figure 2-18. To install:

STEP 1. Push the front panel button labeled EJECT. The cassette tape loader door will spring open.

STEP 2. Install tape by sliding cassette downwards as shown in Figure 2-18 (side A or B refers to whichever side is facing front).

STEP 3. Push the door closed.

STEP 4. The Model 2160 is ready to save or load parameter programs. (Tape must be properly formatted, see Section 2.9.3.)

NOTE: Tape can be left in the tape loader when not in use. If Auto Start has been programmed, it will load at power up (see Section 2.9.5.1).

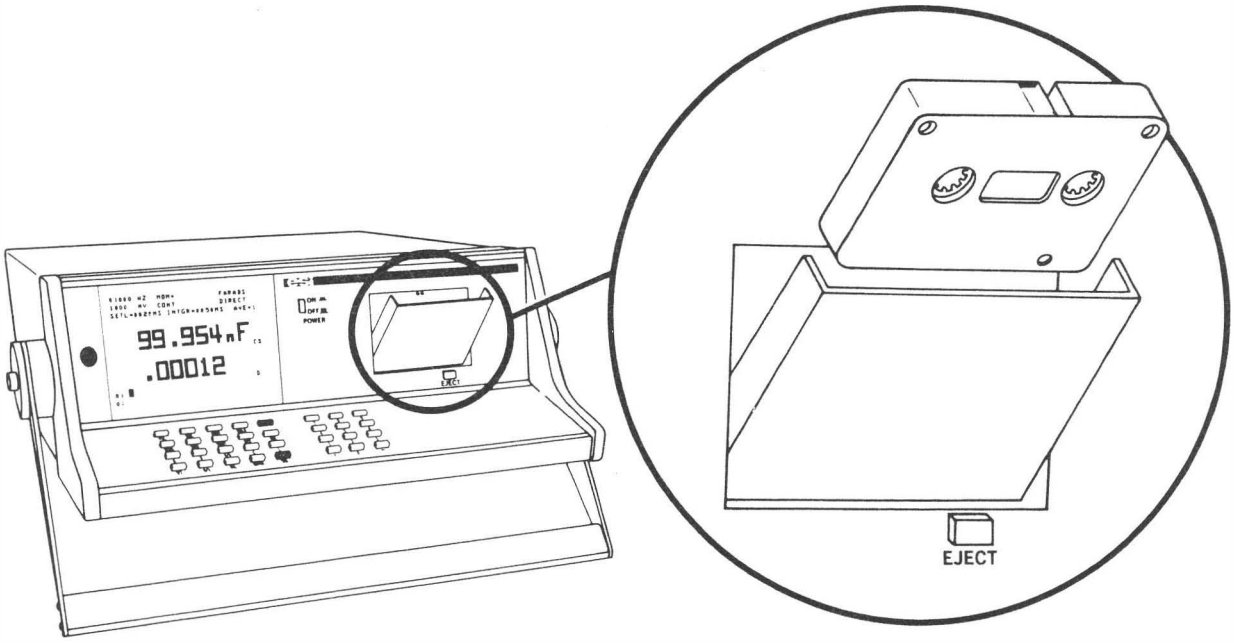

Figure 2-18. Cassette Tape Installation

2.9.2 Cassette Tape Loader Maintenance

To assure reliable data storage and playback, the recording and playback heads should be periodically checked and cleaned. The heads should be cleaned using a cotton tipped swab dipped in alcohol (see Figure 2-19). No other preventive maintenance or lubrication is required.

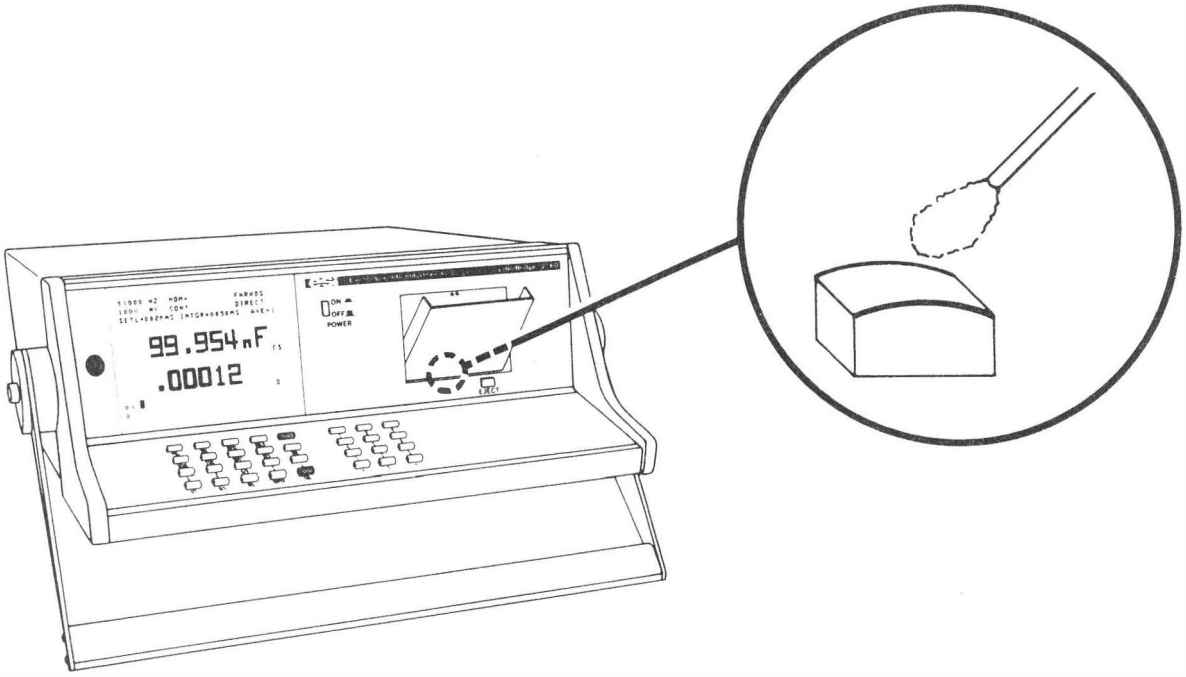

Figure 2-19. Cleaning Recording/Playback Heads

2.9.3 Cassette Tape Formatting

All blank tapes received from ESI have been formatted at the factory. Re-formatting a tape can be used as a method of tape erasure. However, it is recommended to bulk erase tapes before re-formatting due to tape deck variations between VideoBridges. Either a permanent magnet or AC field style tape eraser may be used.

FORMATTING A TAPE DESTROYS ANY AND ALL DATA WHICH MAY HAVE BEEN PREVIOUSLY SAVED ON THE TAPE.

The formatting sequence sets up 80 blocks per side of tape in which information can be stored. Each side must be formatted separately. The time required to format one side of a tape is approximately 7 minutes. To format a tape:

STEP 1. Place the new tape in the cassette drive unit.

STEP 2. Enter test code 3. The Model 2160 will echo the message: "MAKE TAPE - ENTER TO START."

STEP 3. Push the <ENTER> key to start the formatting process. Tape activity during the formatting process is indicated by a blinking cursor at the righthand side of the display screen. The following message is displayed: "BUSY - DO NOT DISTURB."

NOTE: If the cursor stops blinking while the tape is either moving slowly or is stopped, the tape is defective and should be discarded.

STEP 4. Completion of the formatting process will be indicated by the following message: "TAPE FORMATTED".

If any key besides <ENTER> or <SGL> is pressed to start formatting, the following message will result: "FUNCTION CANCELLED."

2.9.4 Tape File System

The tape structure is arranged in the following manner:

2 sides per tape

80 blocks per 50 foot tape side

256 bytes per block

6 blocks (minimum) per file entry

13 file entries per tape side (this is a maximum number and may be decreased by large files)

2.9.4.1 Tape Directory

The Directory or Table Of Contents is a listing of all files on one side of the cassette tape. They are listed with the starting block to the left of the name. Use 12 CODE to display a Tape Directory.

EXAMPLE:

Push	Display	Comments
	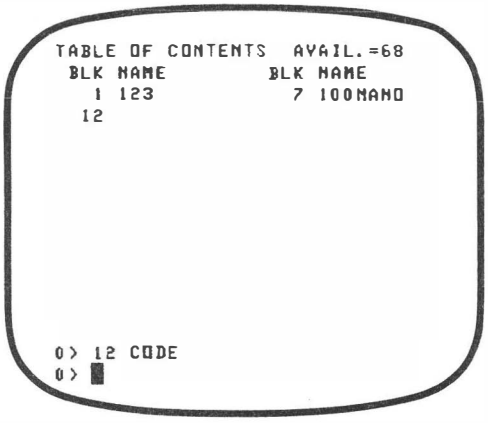	Table of Contents includes block number information and remaining space available (in blocks).

2.9.5 Saving Parameters

To save instrument parameters onto the cassette tape:

PUSH <filename>

Where <filename> can be up to 10 characters long in any combination of letters, symbols, signs, numerals, or punctuation.

NOTE: A space cannot be used in naming a file.

Alphanumeric entries can be entered with the Keyboard Overlay in conjunction with 20 CODE. (Refer to Section 2.1.1.2 in this Manual for additional details on the Keyboard Overlay.)

Example: Using the component sorting example in Section 2.7.5 of this manual, set up all test parameters and binning limits. Save this parameter program under the identification number 123.

Push	Display	Comments
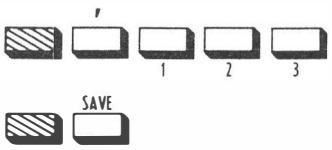	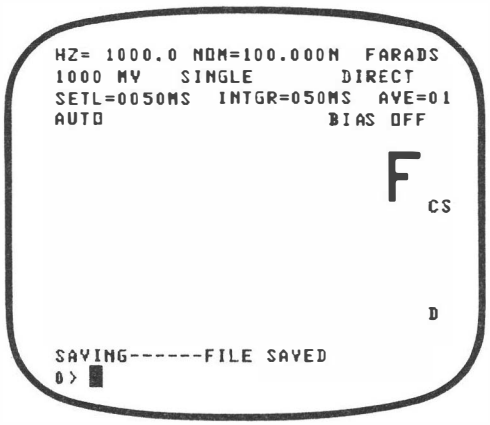	Completion of the SAVE operation is signaled by "FILE SAVED" printed on the CRT. The tape directory will be displayed to verify the SAVE operation.

EXAMPLE 2: Using the same setup as in the above example, use the Keyboard Overlay and save the file under the filename of "100NANO".

Push	Display	Comments
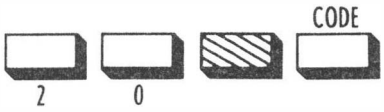	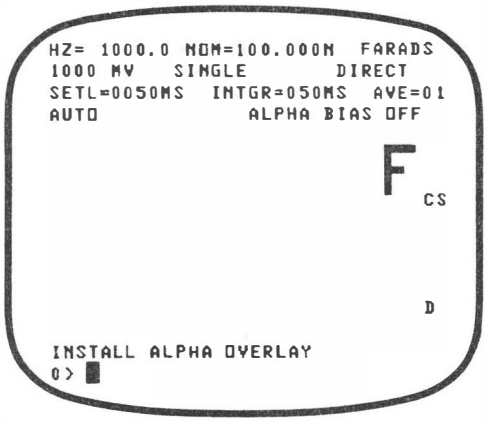	Place the keyboard overlay alternate function side up.

Push	Display	Comments
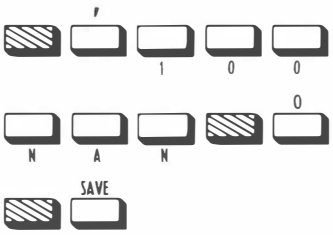	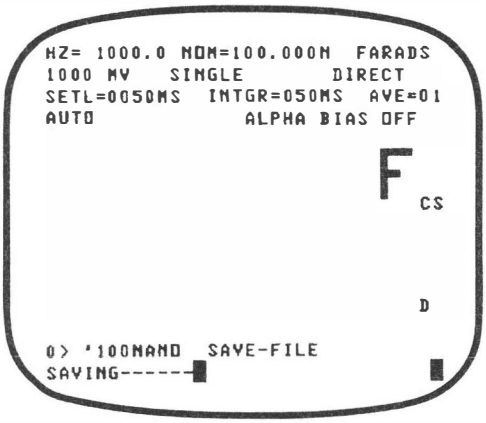	Completion of the SAVE operation is signaled by [FILE SAVED] printed on the CRT.

Push	Display	Comments
	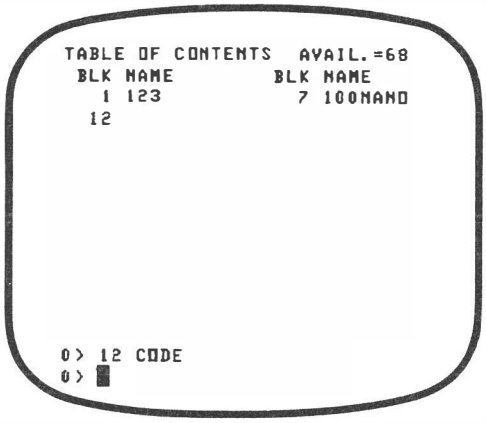	Examine the directory.

Push	Display	Comments
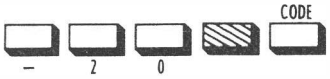	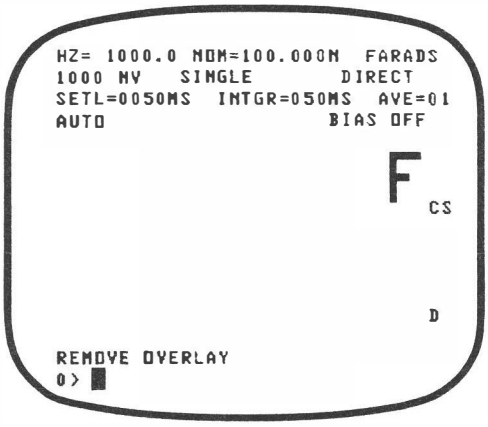	Return to normal keyboard. Place the keyboard overlay with the original functions side up.

2.9.5.1 Autostart

To have a file automatically loaded when power is applied to the instrument, name the file <'.....> when saving it. Whenever power is applied, the instrument will immediately search for this filename and upon finding it will load it automatically.

NOTE: This file name must have exactly six decimal points to function properly.

Example: Using the component sorting example in Section 2.7.5 of this Manual, set up all test parameters and binning limits. Save this parameter program under the Autostart file name.

Push	Display	Comments
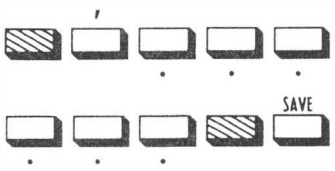	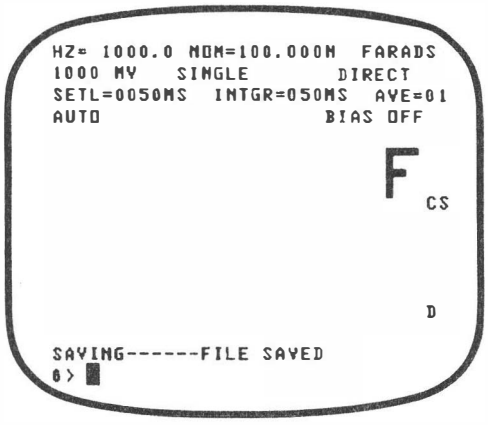	Completion of the SAVE operation is SIGNALED by [FILE SAVED] printed on the CRT. When power is applied to the instrument, this file will LOAD automatically.

2.9.5.2 Save Range Hold

To save RANGE HOLD information, automatic Range Hold must be set as part of the SAVE-FILE command. Any attempt to save a file while in Range Hold will result in the following error message appearing on the screen: USE 5 CODE TO SAVE IN HOLD.

EXAMPLE:

Push

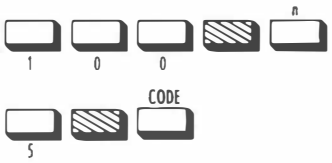

Display

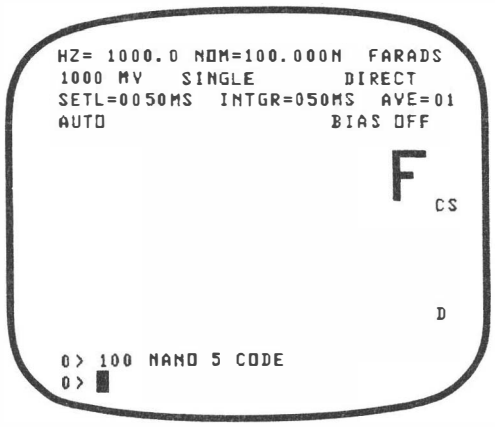

Comments

Automatic range hold is set for 100nF.

NOTE: When using 5 CODE, do not take a measurement before it has been saved to tape.

Push

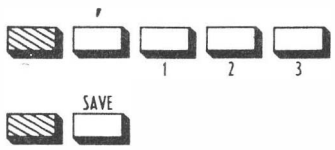

Display

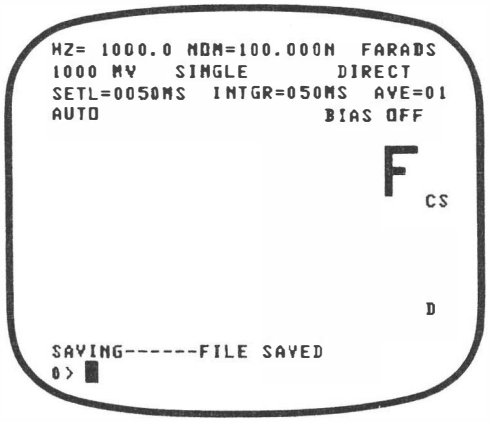

Comments

File 123 is saved with the automatic range hold parameter set for 100nF.

After file 123 is re-loaded, and a part is measured that is within +/-20% of the 100nF nominal, the instrument will go into the HOLD mode.

2.9.5.3 Keyboard Lock

The special Keyboard LOCK command, 9 CODE, can now be saved as part of a file with 18 CODE. This provision prevents any parameters from being inadvertently changed after the program is loaded.

EXAMPLE:

Push	Display	Comments
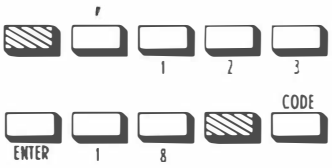	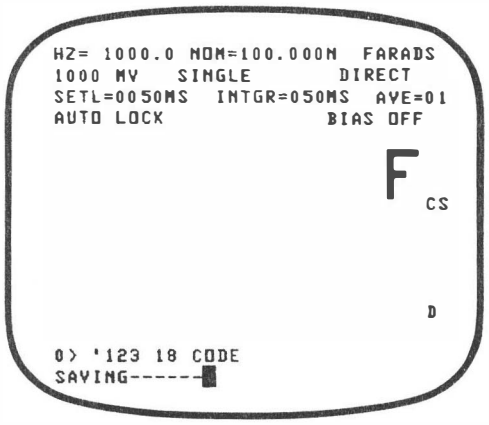	Set up instrument parameters to be saved under filename 123. File 123 will set LOCK command when LOADed.

NOTE: When in this mode, the keyboard is locked except for the SGL key.

NOTE: To unlock the keyboard, push <-> <9> <blue> <CODE>.

2.9.6 Loading Parameter Programs

Programs saved on the cassette tape can be retrieved at any time. To load the Model 2160 with a prestored program, push <blue> <'> <filename> <blue> <LOAD>. <filename> can be any combination of numerals (via VideoBridge Keyboard) or letters (via Keyboard Overlay).

(Refer to Section 2.1.1.2 in this Manual for more information on the Keyboard Overlay.)

EXAMPLE:

Push	Display	Comments
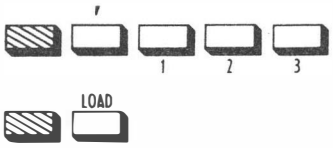	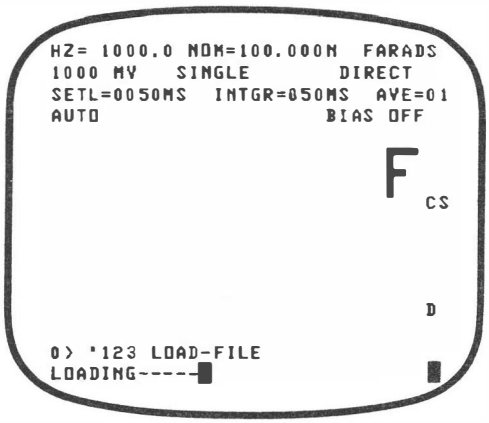	Load previously saved program. Completion of the loading operation is signaled by [LOADED] printed on the CRT (See next picture).
	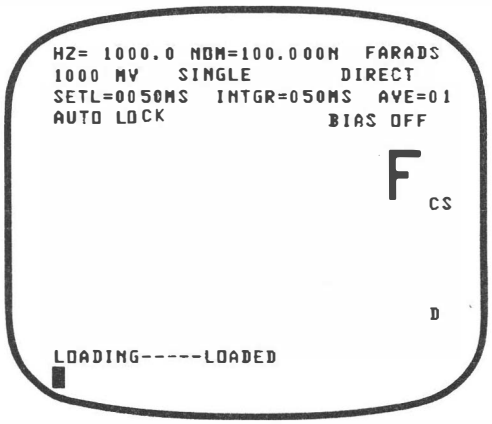	Program 123 is loaded with keyboard LOCKed since it was previously saved with the LOCK command, 18 CODE. (See Section 2.9.5.3.)

EXAMPLE: (ALPHANUMERICS)

Push	Display	Comments
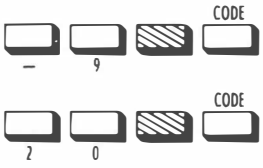	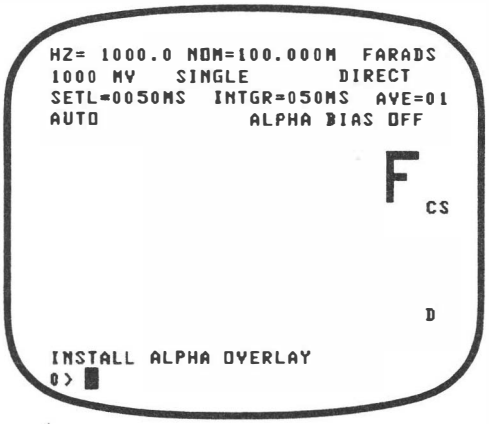	Unlock the keyboard, enable Alpha Overlay. Place the keyboard overlay alternate function side up.

Push	Display	Comments
	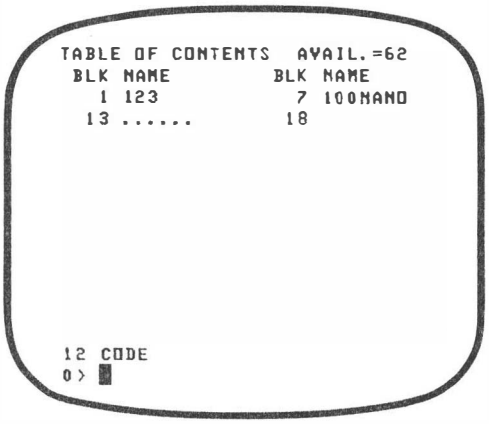	Examine the directory, choosing file "100NANO" for loading.
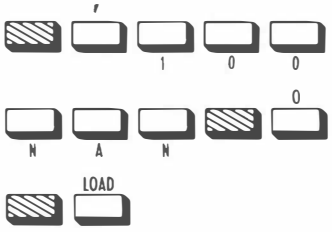	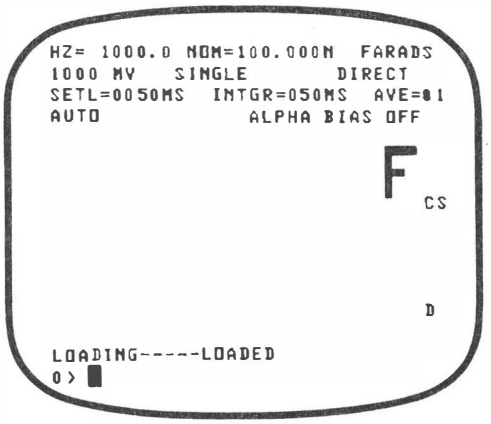	Load the file. Completion of the reloading operation is signaled by [LOADED] printed on the CRT.

2.9.6.1 Load Applications Programs

ESI offers special applications software kits (e.g. STATISTICS, P/N 55104; ANALOG, P/N 55103) for testing applications such as statistics evaluation and graphics display capabilities. Application software source code is the original program code inscribed on the tape at the factory. These tapes are loaded by entering 13 CODE as described in the following example. Object code tapes are copies made by saving the source code onto blank, formatted cassettes. After an object code tape is made, it is loaded into the VideoBridge by using the LOAD key. DO NOT USE 13 CODE TO LOAD OBJECT CODE TAPES.

DO NOT ATTEMPT TO LOAD OBJECT CODE TAPES USING 13 CODE. THE INSTRUMENT WILL BECOME "HUNG UP" AND MUST HAVE POWER SHUT OFF TO RESET. THIS CAN CAUSE LOSS OF DATA.

EXAMPLE: Insert the special Applications Software tape for statistics, then do the following:

Push	Display	Comments
	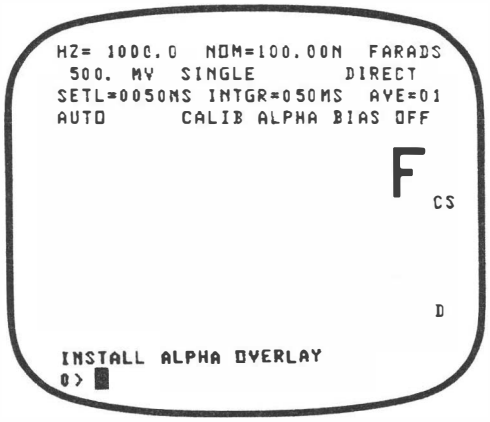	Enter single test mode. Place the keyboard overlay alternate function side up.

Push	Display	Comments
		Examine the directory.
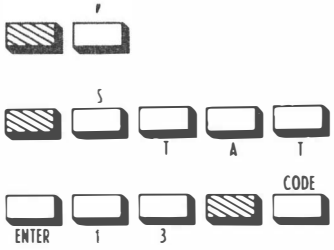		Load the STAT Application Program. Tape activity is indicated by a blinking cursor along with the file-name displayed on the CRT. Completion of the LOADING operation is signaled by the word [LOADED] printed on the CRT.

NOTE: For more information on the use of special Applications Software, consult the document provided with the particular Application Software package.

2.9.6.2 File Deletion

Delete a file with 14 CODE.

EXAMPLE:

Push	Display	Comments
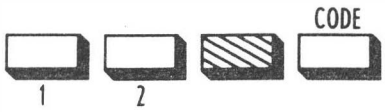	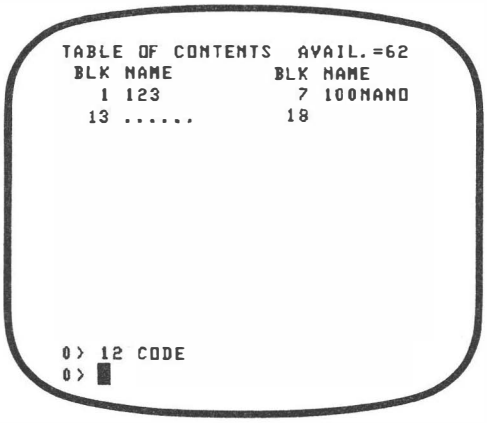	Examine the Directory, and select file 123 for deletion.
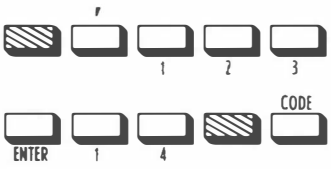		The CRT displays the new Directory after the DELETE operation.

2.9.6.3 File Loaded

Display the name of the file loaded from tape with 19 CODE.

EXAMPLE:

Push	Display	Comments
	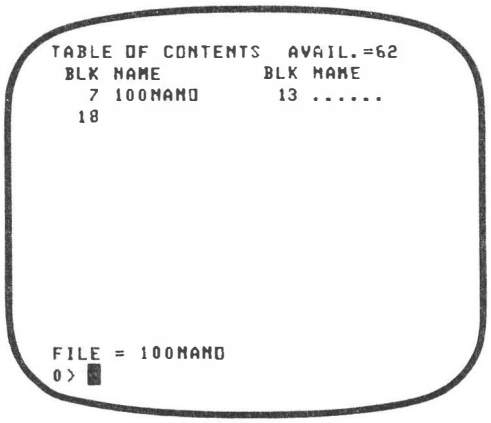	Display prints [FILE=filename] on the CRT, where filename is the name of the last file loaded.

(Refer to Section 2.1.1.1 for additional information on the above test codes.)

2.9.7 Program Write-Protect

Important parameter programs can be protected from accidental erasure with the cassette write-protect feature, of which there are two types. One type features a swivel plug located at the top of each side of the cassette module (Figure 2-20). To protect recorded programs on Side A (which faces the operator upon insertion) from being overwritten, pivot the plug on Side B 1/2 turn clockwise to uncover the rectangular hole beneath it. Similarly, to protect Side B, pivot the plug on Side A. With the plug in this position, no additional data can be written over the existing programs on the opposite side of the tape with respect to the plug. To restore the tape to its unprotected state, simply pivot the plug counterclockwise back to its original position.

Cassettes with the other type of write-protect feature have a cross-shaped plug located on the top of each side of the module (Figure 2-20). To protect these cassettes from being overwritten, push out the cross-shaped plug. With the plug on Side B removed, no additional data can be written over the existing programs on side A. To protect Side B, push out the plug on Side A. Cassettes with the write-protect plug removed can be reprogrammed by placing a piece of cellophane tape over the write-protect hole.

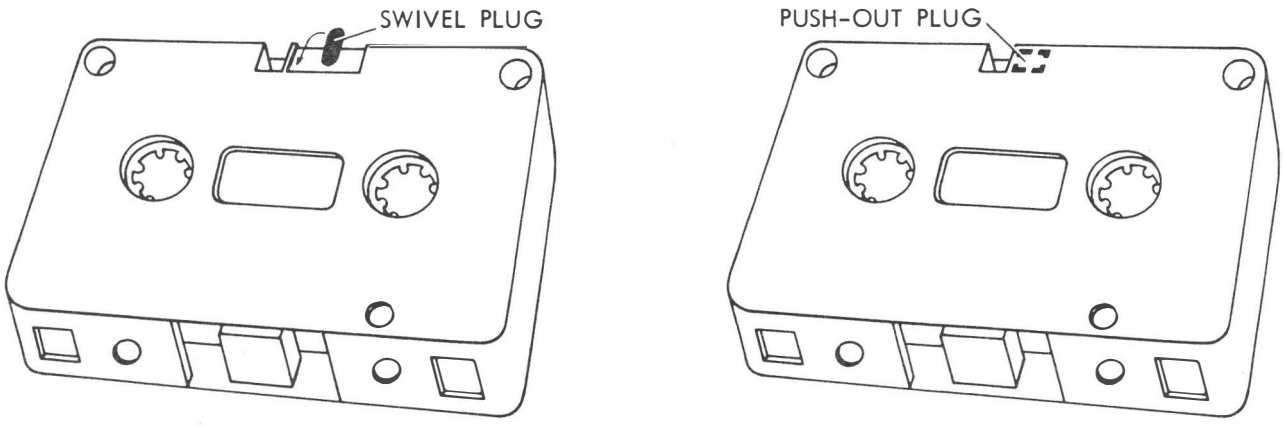

Figure 2-20. Swivel and Push-Out Write-Protect Features

Attempting to save data to a tape that has been write-protected will result in the error message: "WRITE PROTECTED".

2.9.8 Cassette Care

Careful handling procedures will extend the useful life of the mini-cassette tapes used with this instrument. Read the following precautions to extend the life of cassette tapes.

- Avoid direct sunlight, high temperatures, and moisture.
- Avoid touching the tape surface. This prevents transfer of any dirt from your fingers to recording and playback heads.
- Prevent tape breakage and stretching by removing any slack in the tape before putting the cassette into the recorder.
- Observe tape loader maintenance as described in section 2.9.2 of this manual. This will help keep tape surface clean.
- Do not store cassette tapes on or near magnetic fields or devices. Strong magnetic fields may destroy stored programs.

2.10 CAPACITANCE MEASUREMENTS WITH EXTERNAL DC BIAS (Codes 1 and -1)

A DC bias of up to +50V can be applied to the rear panel bias terminals (observe polarity). The Bias Voltage is not applied to the unknown until test code 1 is entered. Measurements with bias are available for capacitance only. Bias supply must have low ripple with internal current limit of 100mA and its output impedance must be less than 50mΩ. Leakage current through the unknown can be measured by sampling the current from the bias source to the bias terminals with a low impedance ammeter. If the bias source impedance is not low compared to the unknown, a bypass capacitor whose impedance is 1/5 of the range resistor at the operating frequency can be connected across the bias terminal posts.

WARNING

ELECTRICAL SHOCK HAZARD EXISTS WHEN A BIAS SUPPLY IS CONNECTED TO THIS INSTRUMENT. WHEN AN EXTERNAL BIAS SUPPLY IS ATTACHED, THE BIAS VOLTAGE IS PRESENT ON THE REAR PANEL BNC CONNECTORS. USE ONLY BIAS VOLTAGES UP TO 50VDC AND BIAS SUPPLIES CURRENT LIMITED AT 100mA. DO NOT TOUCH, CONNECT, OR DISCONNECT THE UNKNOWN COMPONENT OR BNC CABLES WHILE A BIAS VOLTAGE IS APPLIED.

A DC bias capability of +200V is available by ordering an SP5240 option. The SP5240 is identical to the 2150 and 2160 except for the extended bias capability. See Section A.4 for more information.

Use the following procedure when measuring DC-biased capacitors.

STEP 1. Loosen the black terminal caps and remove the shorting strap by pulling it up and pivoting it outward. The strap may be held in place by tightening the terminal caps.

STEP 2. Install bypass capacitor if needed (observe polarity).

STEP 3. Connect the external biasing supply to the instrument's rear panel bias terminals (observe polarity).

STEP 4. Turn bias supply on and set to the proper bias setting.

STEP 5. Connect the unknown capacitor to the test leads. Observe proper polarity connection when testing electrolytic capacitors.

STEP 6. Turn the bias voltage on. PUSH

STEP 7. Make the measurement.

STEP 8. Turn the bias voltage off. PUSH

STEP 9. Wait five seconds and remove the measured capacitor from the test leads.

STEP 10. Repeat steps 5 through 9 for each component to be measured.

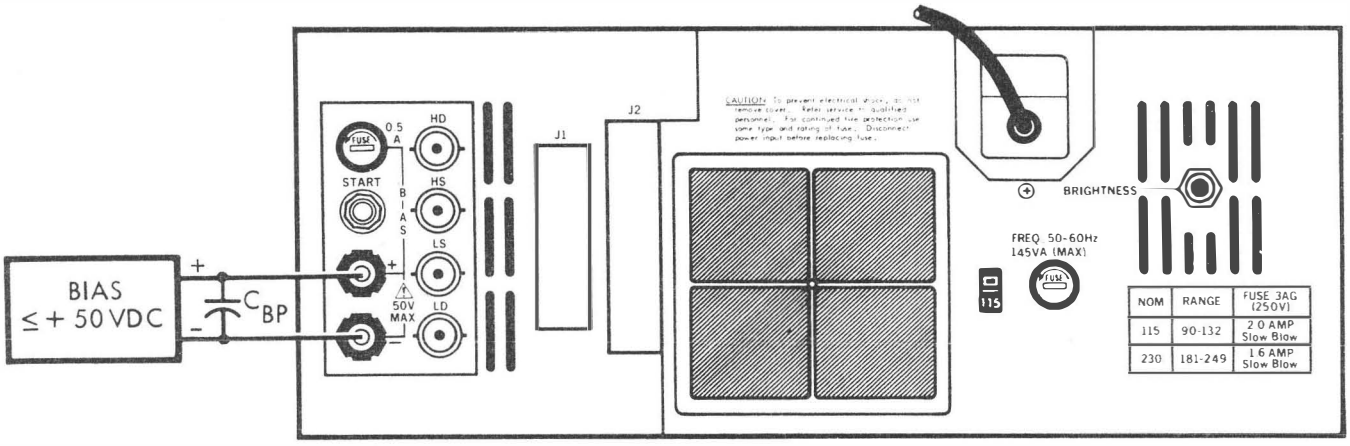

Figure 2-21. Capacitance Measurements with Bias

NOTE: When 1 CODE is entered, the instrument automatically uses 100ms settling time. After turning bias OFF by -1 CODE, settling time returns to the previously set amount.

2.11 ERROR MESSAGES

If an improper operation is attempted, the 2150/2160 responds by displaying an error message. Error messages are displayed at the bottom of the CRT screen (except CAL ?, ERROR ANALOG, ERROR CALC). All parameters entered prior to the improper operation remain unchanged. Following is a list of error messages that may appear during the programming and operation of this instrument. Included with each error message is a short explanation of probable causes for the message.

> **NOTE:** While in continuous measurement mode, temporary error conditions may occur if the device-under-test is connected during part of the measurement sequence. As a result, an error message may be momentarily displayed. This is normal and does not indicate instrument malfunction.

Programming and Operating Related Errors

ERROR ANALOG

This indicates that the input to the analog circuitry has been overloaded. The measurement is discarded, the part is binned as a D reject and the display reads "ERROR ANALOG" in large characters. Check for an overrange part if on range "HOLD". Reset to "AUTO" range and make another measurement.

ERROR Calc.

This indicates that the floating point capabilities of the microprocessor have been overloaded (e.g. the present data has overflowed its range or a divide-by-zero operation has been encountered). The measurement is discarded, the part is binned as a D reject, and the display reads "ERROR CALC". Re-check all measurement settings (such as an underrange value if on range "HOLD") and make another measurement.

OVERLOAD !--SUPPLYING XX MV for low impedance devices

OR

OVERLOAD !--SUPPLYING XX MA for high impedance devices

Where xx = the actual value of test signal level supplied by the VideoBridge.

If the impedance of the component being measured is too high for the current range or too low for the voltage range to supply the level specified on the screen, the appropriate message will appear on the bottom line of the display.

In a voltage overload condition, the instrument will supply the voltage available at a maximum current of 100mA.

In a current overload condition, the instrument will supply the current available at a maximum voltage of 1500mV.

The error message will show what current or voltage is being supplied to the component (see Section 2.5.2). The measurements taken are still valid, though only at the test signal level indicated by the message.

CAL ?

If the word "ERROR" was displayed after calibrating any range, this message will be displayed in the bottom line of the parameter field after calibration. This indicates that all ranges indicated as "OK" have their zero offsets stored, but one or more ranges were not calibrated properly. The message will also be displayed when that particular frequency/test level combination is recalled. No message will be displayed if all ranges failed calibration, and no calibration offsets are applied. To correct this condition, the zero calibration procedure must be performed again (see Section 2.3.5).

OUT OF RANGE

This message will be displayed when a measurement taken in RANGE HOLD is more than 100 times smaller or larger than the present range resistor. To correct this condition, re-enter AUTO RANGE. There will be no message if the VideoBridge is holding the highest range with very high unknowns or the lowest range with very low unknowns.

WRONG # OF ARGUMENTS

Any of the commands (mostly upper function key strokes) which take numerical arguments will display this message if insufficient numbers precede the word. For instance, programming <blue> Bin# will give a "Wrong # of Arguments" message because it requires the number of the bin being programmed and the limits for that bin. Start again.

PARAMETER STACK EMPTY

The VideoBridge recognizes the argument number as valid but it is improperly formatted or inappropriate to the command.

UNDEFINED

Occasionally a combination of keys will be pressed which result in the construction of a word which the instrument does not recognize. Pushing a number key, then a key which does not use a number ahead of it will result in something like "ldirect". The instrument will not recognize "ldirect" and the undefined message appears. Start again.

BIN 11 IN USE

Non-zero limits have been set for Bin 11. Analog Busy (EOC) function cannot be activated until Bin 11 limits are set to zero.

ANALOG-BUSY ACTIVE

Test code 16 has been entered. Bin 11 limits cannot be changed until -16 CODE is programmed.

FUNCTION CANCELLED

Another key besides <SGL> or <ENTER> was pressed while attempting to activate tape formatting or zero calibration.

SET NOMINAL VALUE

This message will result if an attempt is made to enter -8 CODE, 8 CODE, 21 CODE, % SORT mode, or DEViation mode without entering a nominal value.

DEV. ON Q/D NOT ALLOWED

The VideoBridge does not support a deviation calculation on minor functions Q and D. This message occurs if DEV is pressed with Q or D as the top display function.

Cassette Tape Related Errors (Model 2160 Only)

BAD TAPE - DISCARD

This error message says that the tape was not able to be formatted (3 CODE).

BAD READ

The tape file was not read properly during a LOAD operation from the tape. Re-enter file name and press <blue> <LOAD> again.

BAD WRITE

A problem was encountered while attempting a SAVE operation to the tape. Re-enter file name and press <blue> <SAVE> again.

NO TAPE IN PLACE

This message will appear when there is no cassette tape in the drive unit or when the LOAD or SAVE buttons are pushed on instruments without cassette capability.

WRITE PROTECTED

This message comes onto the screen if a SAVE or format command is tried on a cassette tape with its write protect opening uncovered (See Section 2.9.7).

TAPE JAMMED

When the cassette tape will not move forward or backward, this message appears on the screen. Remove the tape, re-insert, and try again.

USE 5 CODE TO SAVE IN HOLD

This message will result if an attempt is made to save a file while using manual range hold. Use the automatic range hold function described in Section 2.9.5.2 in this manual.

FILE DOES NOT EXIST

This message comes onto the screen if the VideoBridge has been directed to LOAD a file whose name is not listed in the directory.

2.11.1 Remote Output Error Codes

The following error codes are returned on remote output devices, such as GPIB and RS-232C Interface. See Section A.2 for more information on these VideoBridge options.

0	No Error	1	Can't Supply
2	Analog Error	3	Analog Error--Can't Supply
4	Calculation Error	5	Calculation Error--Can't Supply

NOTE: "Can't Supply" indicates inability to supply test signal current or voltage--whichever the VideoBridge has been programmed for.

"Analog Error" indicates the same fault condition as the "ERROR ANALOG" message on the CRT.

"Calculation Error" indicates the same fault condition as the "ERROR CALC" message on the CRT.

SECTION 3
CIRCUIT DESCRIPTIONS

3.1 INTRODUCTION

This section discusses the four major circuits that make up the Model 2150/2160. These four circuits are: measurement, motherboard, CRT, and power supply. Each of the discussions that follow, start by presenting a block diagram, then continue with a discussion of the operation of the major blocks within each diagram.

3.2 MEASUREMENT OVERVIEW

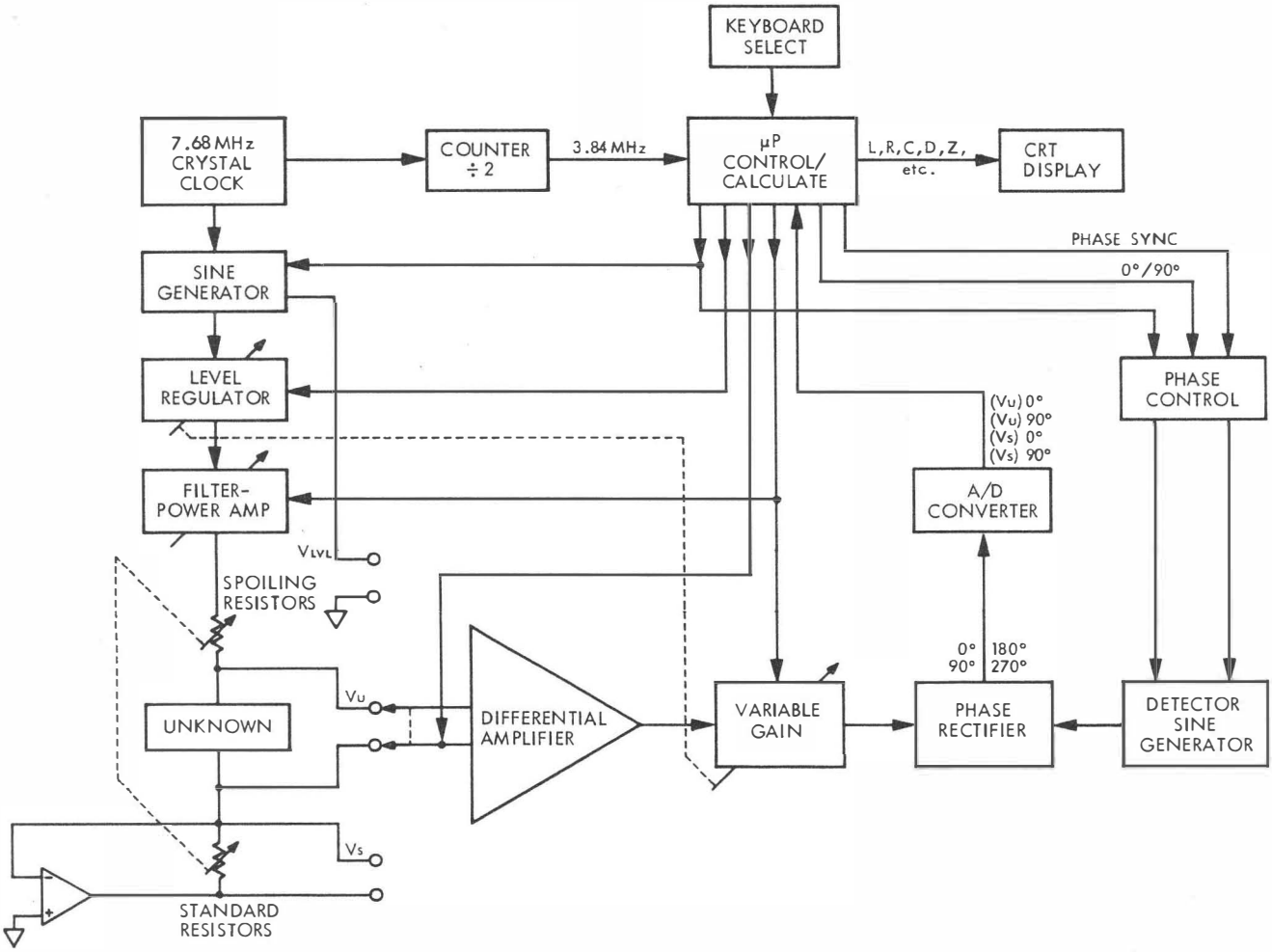

Figure 3-1. Block Diagram

The microcomputer control/calculate block is the command center for all instrument operations. It accepts input from the keyboard and coordinates all phases of a measurement sequence. It also performs all calculations required to arrive at the desired measured quantities and displays them.

Model 2150/2160 operation essentially starts with the 7.68MHz clock. This clock is divided by 2 to obtain the 3.8MHz processor clock and divided by N (1-3000) to develop the sinewave measurement signal.

The sinewave generator is frequency programmable (20Hz to 150kHz). It produces a digitally-stairstepped, sinewave output that is band limited by the filter block, then passed through the programmable level regulator. The result is a sinewave signal of specified frequency within a specified voltage range, in the mV mode, or current range, in the mA mode. This sinewave is applied to the unknown component being measured, and the standard (range) resistor.

A differential amplifier sequentially measures the voltages across the unknown component and the standard resistor. These voltages are passed through the variable gain amplifier to the phase rectifier. The phase sensitive voltmeter (phase rectifier) compares the vector relationships of the measured signals to determine which portions are in phase and which are in quadrature. The phase rectifier outputs the following four DC voltages:

V_0 or $V_{unknown}\ 0°$
V_1 or $V_{unknown}\ 90°$
V_2 or $V_{standard}\ 0°$
V_3 or $V_{standard}\ 90°$

These voltages are serially processed by the A/D converter with resistance (R) and reactance (X), or conductance (G) and susceptance (B), as computed by the Z80 CPU.

HIGH IMPEDANCE

$$G_{unknown} = \frac{V_0 V_2 + V_1 V_3}{(V_0)^2 + (V_1)^2} \times \frac{1}{R_{standard}}$$

$$B_{unknown} = \frac{V_0 V_3 - V_1 V_2}{(V_0)^2 + (V_1)^2} \times \frac{1}{R_{standard}}$$

LOW IMPEDANCE

$$R_{unknown} = \frac{V_0 V_2 + V_1 V_3}{(V_2)^2 + (V_3)^2} \times R_{standard}$$

$$X_{unknown} = \frac{V_1 V_2 - V_0 V_3}{(V_2)^2 + (V_3)^2} \times R_{standard}$$

All other impedance parameters are computed using the results of these measurements, the test frequency, and the formulas in Figure 3-2.

The calculated measurement information is displayed on the CRT screen.

SHORT CIRCUIT CORRECTION (RANGE 0)	OPEN CIRCUIT CORRECTION (RANGE 1→4)
$R_s = (R_s)m - (R_s)_0$	$G_p = (G_p)m - (G_p)_0$
$X_s = (X_s)m - (X_s)_0$	$B_p = (B_p)m - (B_p)_0$
$D = \frac{R_s}{\lvert X_s \rvert}$	$D = \frac{G_p}{\lvert B_p \rvert}$
$Q = \frac{\lvert X_s \rvert}{R_s}$	$Q = \frac{\lvert B_p \rvert}{G_p}$
$L_s = \frac{X_s}{2\pi f}$	$L_s = \frac{-B_p}{2\pi f(G_p^2 + B_p^2)}$
$L_p = \frac{R_s^2 + X_s^2}{2\pi f X_s}$	$L_p = \frac{-1}{2\pi f B_p}$
$C_s = \frac{-1}{2\pi f X_s}$	$C_s = \frac{G_p^2 + B_p^2}{2\pi f B_p}$
$C_p = \frac{-X_s}{2\pi f(R_s^2 + X_s^2)}$	$C_p = \frac{B_p}{2\pi f}$
$B_p = \frac{-X_s}{R_s^2 + X_s^2}$	$X_s = \frac{-B_p}{G_p^2 + B_p^2}$
$G_p = \frac{R_s}{R_s^2 + X_s^2}$	$R_s = \frac{G_p}{G_p^2 + B_p^2}$
$\lvert Z \rvert = \sqrt{R_s^2 + X_s^2}$	$\lvert Z \rvert = \frac{1}{\sqrt{G_p^2 + B_p^2}}$
$\lvert Y \rvert = \frac{1}{\sqrt{R_s^2 + X_s^2}}$	$\lvert Y \rvert = \sqrt{G_p^2 + B_p^2}$
$R_p = \frac{R_s^2 + X_s^2}{R_s}$	$R_p = \frac{1}{G_p}$
$X_p = \frac{R_s^2 + X_s^2}{-X_s}$	$X_p = \frac{1}{B_p}$
$G_s = \frac{1}{R_s}$	$G_s = \frac{G_p^2 + B_p^2}{G_p}$
$B_s = \frac{1}{X_s}$	$B_s = \frac{G_p^2 + B_p^2}{-B_p}$

R = Resistance
s = Series measurement
m = Measured value
0 = Zero correction value
G = Conductance
p = Parallel measurement
X = Reactance
B = Susceptance
D = Dissipation factor
Q = Quality factor
L = Inductance
f = Frequency
C = Capacitance
Z = Impedance
Y = Admittance

Figure 3-2. Model 2150/2160 Impedance Formulas

3.3 MEASUREMENT CIRCUITRY

The electronics involved with the actual measuring of a component is contained on two circuit cards. The Digital circuit card performs two basic functions: sinewave generation, and analog-to-digital conversion. The Analog circuit card holds all other measurement circuitry, i.e. level regulator, standard (range) resistors, amplifiers, phase rectifier, etc., needed to make a measurement.

3.3.1 Digital Circuit Card (P/N 53522)

3.3.1.1 Sine Generator

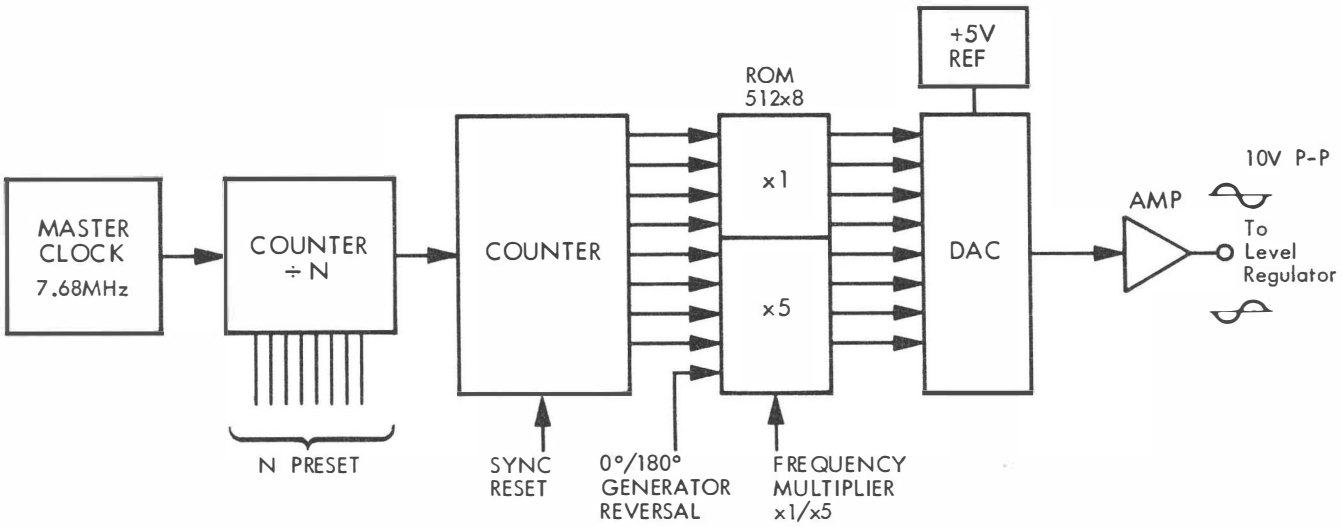

x1

$$\text{FREQUENCY} = \frac{60{,}000\text{Hz}}{N_1}$$

$N_1 = 1 \rightarrow 3000$
$N_1 = 1 \quad F = 60{,}000\text{Hz}$
$N_1 = 3 \quad F = 20{,}000\text{Hz}$
$N_1 = 3000 \quad F = 20\text{Hz}$

$$\frac{7.68\text{MHz}}{128 \text{ (Steps in one complete sinewave)}} = 60{,}000\text{Hz}$$

x5

$$\text{FREQUENCY} = \frac{300{,}000\text{Hz}}{N_2}$$

$N_2 = 2 \rightarrow 30$
$N_2 = 2 \quad F = 150{,}000\text{Hz}$
$N_2 = 30 \quad F = 10{,}000\text{Hz}$

$$\frac{7.68\text{MHz}}{128 \text{ (Steps in five complete sinewaves)}} = 300{,}000\text{Hz}$$

Figure 3-3. Sine Generator Block Diagram

Measurement begins when a sinewave signal at a specified frequency is applied to the unknown component. The origin of this sinewave signal is the sine generator (Figure 3-3) which consists of a preset counter chain, a second counter, a 512 x 8 bit preprogrammed ROM, a digital-to-analog converter (DAC), and a current-to-voltage buffer amplifier. The preset counter chain (U22, U24, U25) is a set of three chips configured to perform a divide-by-N function. It divides the 7.68MHz master clock into one of the 3023 frequencies that are presettable by the microcomputer. The new frequency, actually a squarewave signal, goes into a second counter chain made of U16 and U19. The second counter is connected to U17, a read only memory (ROM), in such a way that as the counter's output lines toggle, they ripple through all the addresses on the ROM. For each address the ROM outputs 8 bits of information which are fed to the D/A converter.

Twelve complete sinewave signals are stored in the 74S472 ROM in two separate locations of 256 address locations each. These locations are referred to as the X5 block (ten sinewave signals) and the X1 block (two sinewave signals, see Figure 3-3).

For test frequencies above 10kHz which divide 60,000 evenly, and for all frequencies at or below 10kHz, the X1 memory block reserves 128 address locations for the 0° sinewave and 128 locations for the 180° sinewave. Each address location contains 8 bits of information.

NOTE: 7.68MHz divided by 128 sinewave steps equals the 60kHz base frequency used to determine these test frequencies.

$$\frac{60\text{kHz}}{N} = \text{Test Frequency}$$

Where: N = 1 to 3000

For all test frequencies above 10kHz which do not divide 60,000 evenly, the X5 memory block provides an average of 128/5 or 25.6 steps for five 0° sinewaves and an average of 25.6 steps for five 180° sinewaves. This enables the ROM to store five times as many cycles (though each with fewer steps) as the X1 location.

NOTE: 7.68MHz divided by 25.6 sinewave steps equals the 300kHz base frequency used to determine these test frequencies.

$$\frac{300\text{kHz}}{N} = \text{Test Frequency}$$

Where: N = 2 to 29 (except 5, 10, 15, 20, 25)

For a complete listing of test frequencies, see Section 2.5.1.

Notice in Figure 3-3 that the counter and the ROM each have an input line coming from outside the sine generator electronics. The 0°/180° line to the ROM, under microcomputer control, selects the polarity of the ROM's output sinewave, 0° or 180°. This is the generator reversal routine where the sinewave polarity is reversed for a second series of measurements. The two series of measurements, made with opposite polarities, are algebraically subtracted to cancel offset voltages and synchronized line related pick-up.

At frequencies below 200Hz, the sync reset line to the counter is used to synchronize the 2150/2160 sinewave to the power line. The 2150/2160 detects power line zero crossings and starts its sinewave at these exact points. This is accomplished by resetting the counter at the first power line zero crossing after a completed measurement cycle. Test signal/power line synchronization maximizes rejection of line related electromagnetic interference (EMI) in the measurement circuit.

At frequencies above 200Hz, the EMI level decreases so that line synchronization is not necessary. Neither linelock time nor the additional settling time provided by generator reversal is required. U12 provides a detector reversal technique which also cancels op amp offsets, but settling time only occurs once at the beginning of the measurement sequence. This results in faster measurement speeds above 200Hz.

The digital-to-analog converter (DAC) is the analog device that produces the actual waveform. It works with operational amplifier U14 to transform the DAC's current output into a voltage waveform. The sine-wave output from the sine generator is 10V peak-to-peak and is symmetrical around zero.

3.3.1.2 Analog-to-Digital Converter

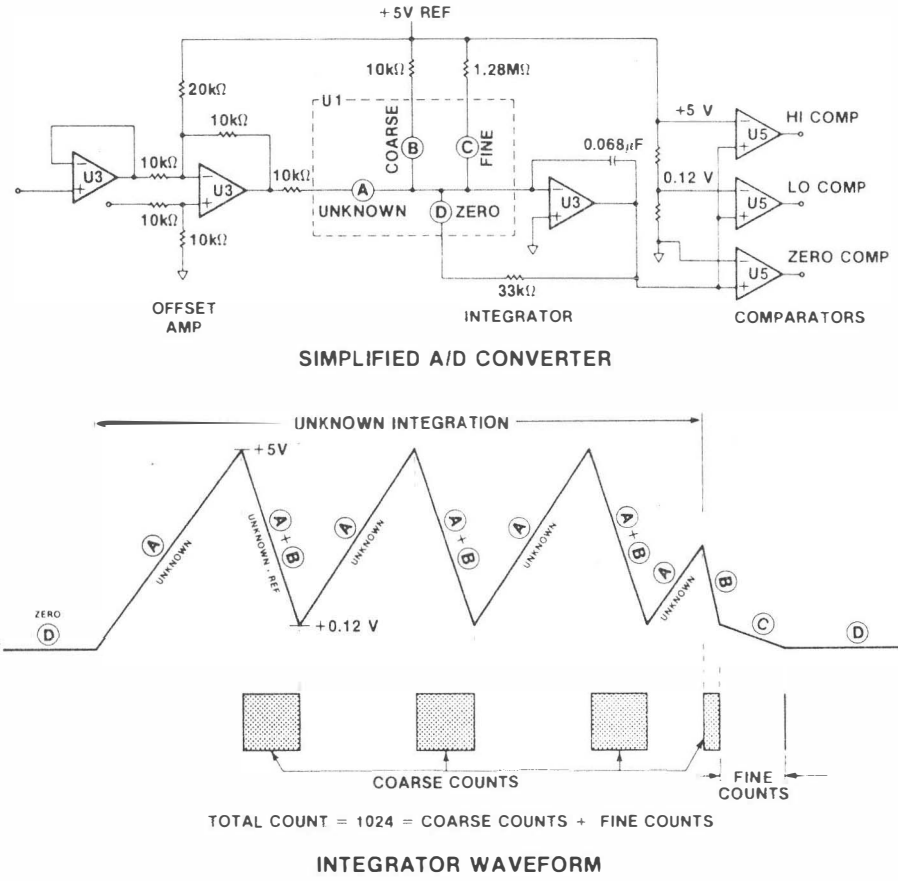

Figure 3-4. A/D Converter Simplified Diagram

The analog-to-digital converter is called a "charge balancing" A/D converter (see Figure 3-4). Moving from left to right on the diagram, the offset amplifier, two sections of quad-amplifier U3, offsets the DC input voltages, from the phase rectifier, so they always remain one polarity. Solid state switch, U1, selects inputs, i.e. unknown signal, standard signal, coarse reference, fine reference, or zero, to the third section of U3, the integrator. Three comparator sections of U5, and logic U7, U8, U6, and U11 (see schematic diagram in Section 5 of this manual), synchronize the turning ON and OFF of coarse and fine counters with the switching of coarse and fine reference inputs to the integrator. Counter timer, U29, has 3 channels: two channels are counters, one for coarse counts, and one for fine counts during A/D conversion, and the third channel sets up, through the bus system, the number of multiples of test frequency over which the integrator will integrate. The 2150/2160 is locked into exact multiples of the test cycle or test frequency because it is the test frequency that determines the actual integration time. The Digital assembly also contains support logic for the A/D converter. The support logic interfaces the A/D converter's output to the microcomputer, and performs level shifting for the drive signals to the input (reference) switches on the integrator. The easiest way to step through the A/D conversion sequence is to follow the integrator waveform (in Figure 3-4). The circled letters on the waveform correspond to the input (reference) switches in the simplified diagram.

The integrator waveform starts from the 0V level. When switch A is turned ON, the integrator starts ramping toward the +5V level. (Switch A allows the unknown signal, a DC voltage from the phase rectifier, to pass to the integrator.) Upon reaching the +5V level a comparator, called "HI COMP", causes the logic to turn switch B, the coarse reference, ON. With both switches ON, the integrator ramps back down toward zero. It ramps down to approximately +0.12V where the "LO COMP" comparator trips turning the B switch OFF. With the A switch ON by itself again, the integrator ramps back up toward +5V. Switch B comes back ON at the +5V level, and the integrator ramps down toward zero. The object of this switching technique is to keep the integrator in bounds, between +5V and +0.12V, for the duration of the unknown integration. This allows longer integration times without the integrator going out of range and provides a wide choice of integration times and also provides shorter total integration time due to the overlap of the reference signal with the unknown integration.

At the end of the unknown integration, switch A is turned OFF. (It remained ON during the unknown integration.) Now, since the integrator is still above the 0V level, switch B is turned ON driving the integrator to the 0.12V level, then is turned OFF and switch C is turned ON. Switch C is called "fine" reference. The fine reference brings the integrator back to 0V.

The relationship between coarse and fine reference levels lies in the fact that they each have an associated counter. Each time the B switch is turned ON, a counter is being gated to keep track, by accumulating counts, of how long switch B was on. (In Figure 3-4, the waveform has four bursts of coarse counts, three of which are roughly the same level, the fourth is a finish off of the coarse counts.) The fine counter also accumulates counts when switch C is turned ON. The relationship, for counts, is one coarse count equals 1,024 fine counts.

Where does this 1,024 count relationship come from?

Looking carefully at the coarse and fine reference levels, you find that the coarse and fine differ by a factor of 128, not by 1,024. The clocks associated with the coarse counter and the fine counter are not the same, one clock is 120kHz, that is the coarse count clock, and the fine clock is 8 times that or 960kHz. As a result there is a factor-of-8 difference, and 8 times 128 equals 1,024.

The total of all coarse and fine counts constitutes a measured value. Accumulated counts for each of the four measured values ($V_{unknown}$ 0°, $V_{unknown}$ 90°, $V_{standard}$ 0°, $V_{standard}$ 90°) are sent to the microcomputer.

3.3.2 Analog Circuit Card (P/N 53675)

3.3.2.1 Signal to the Unknown

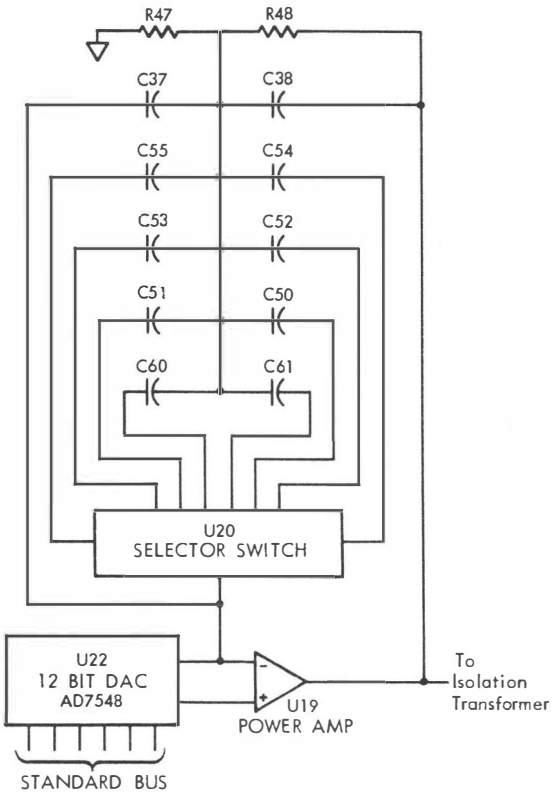

Figure 3-5. Level Set, Filter, and Power Amplifier Block Diagram

As the sinewave from the sine generator comes onto the Analog circuit card, it goes through a level-setting DAC. The level-set DAC is a twelve-bit converter under microcomputer control. It can reduce the test signal to any one of 4096 predetermined test levels. This level-set DAC, U22, is ganged with U17, the variable gain DAC. Then, as the test signal level is reduced, the measured signal can be amplified by the same amount for further processing.

The level-set DAC outputs a stairstepped sinewave that must be filtered before it can be used. The Analog assembly has five filters that can be selected for this job. Filter selection is dependent on the test signal frequency:

C60 and C61 are selected at frequencies below 200Hz,
C50 and C51 between 200Hz and 2kHz,
C52 and C53 between 2kHz and 20kHz,
C54 and C55 between 20kHz and 42.8kHz,
C37 and C38 between 42.8kHz and 150kHz.

The filtered sinewave is sent to the power amplifier.

The power amplifier consists principally of op amp U19 and transistor array Q2. The output of Q2 supplies enough current through the HI DRIVE port to the unknown so a measurement can be made. The power amplifier also supplies a signal to the isolation transformer and the high side of the standard (range) resistors.

3.3.2.2 Range Switching

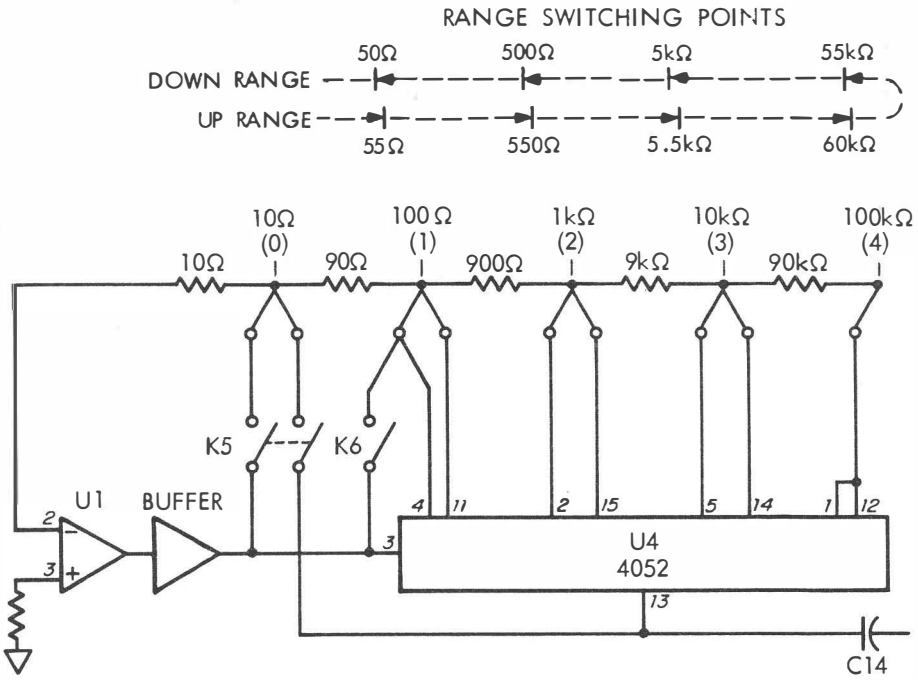

Figure 3-6. Range Switching Block Diagram

Figure 3-6 illustrates the range switching used in the 2150/2160. The diagram shows the standard resistor combinations used to configure any of the resistance ranges, 0 through 4. Due to higher current present at the low impedance ranges (0 and 1), relays K5 and K6 are used to switch the 10Ω and 90Ω standard resistors in/out of the feedback circuit, while the 900Ω, 9kΩ, and 90kΩ resistors are switched by solid state switch U4. The op amp, U1 and buffer force all current to pass through the selected range resistor. Voltage sensing is provided by the extra contact point at each range value.

Range 4 (100kΩ) is locked out above 10kHz due to stray capacitance effects.

3.3.2.3 Series Spoiling Resistors

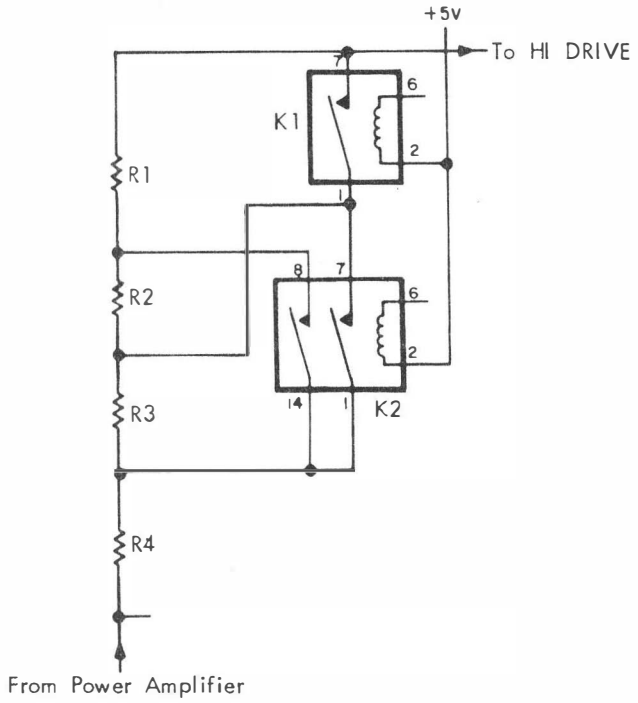

Figure 3-7. Series Spoiling Resistors

Series spoiling resistors, R1 thru R4, stabilize the instrument for reactive unknowns. Each resistor is placed in series with the unknown by relays K1 and K2. The spoiling resistors are changed in conjunction with a corresponding standard resistor.

3.3.2.4 Phase Trims

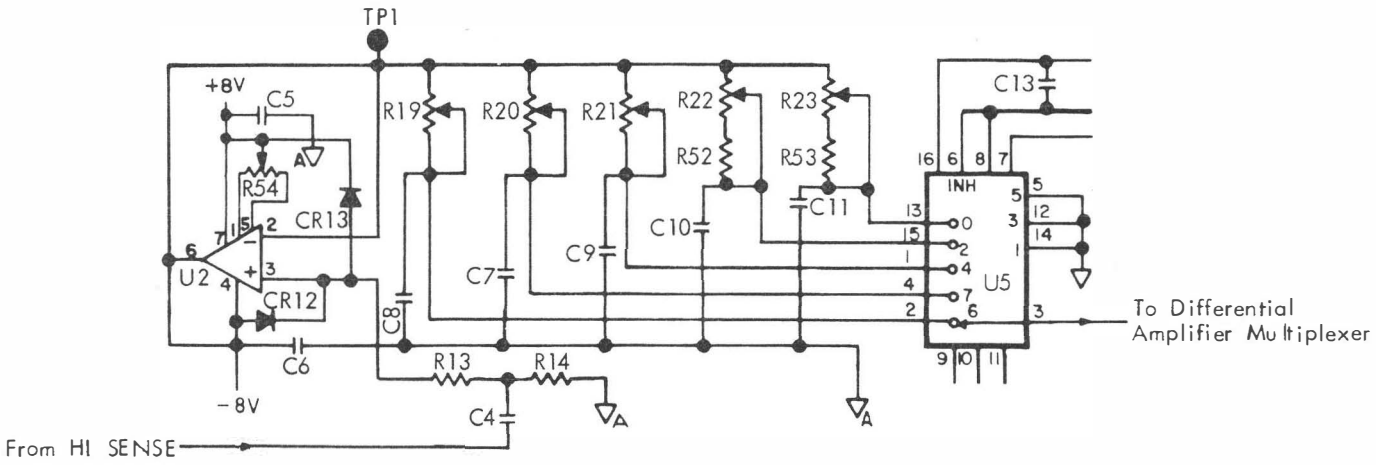

Figure 3-8. Phase Trims

Phase calibration trimmers R19 thru R23 and R40 calibrate dissipation factor for each measurement range. They compensate for phase differences between the unknown and standard measurement channels. Solid state switch U5 changes the phase trim when the corresponding range resistor is changed.

3.3.2.5 Differential Amplifier

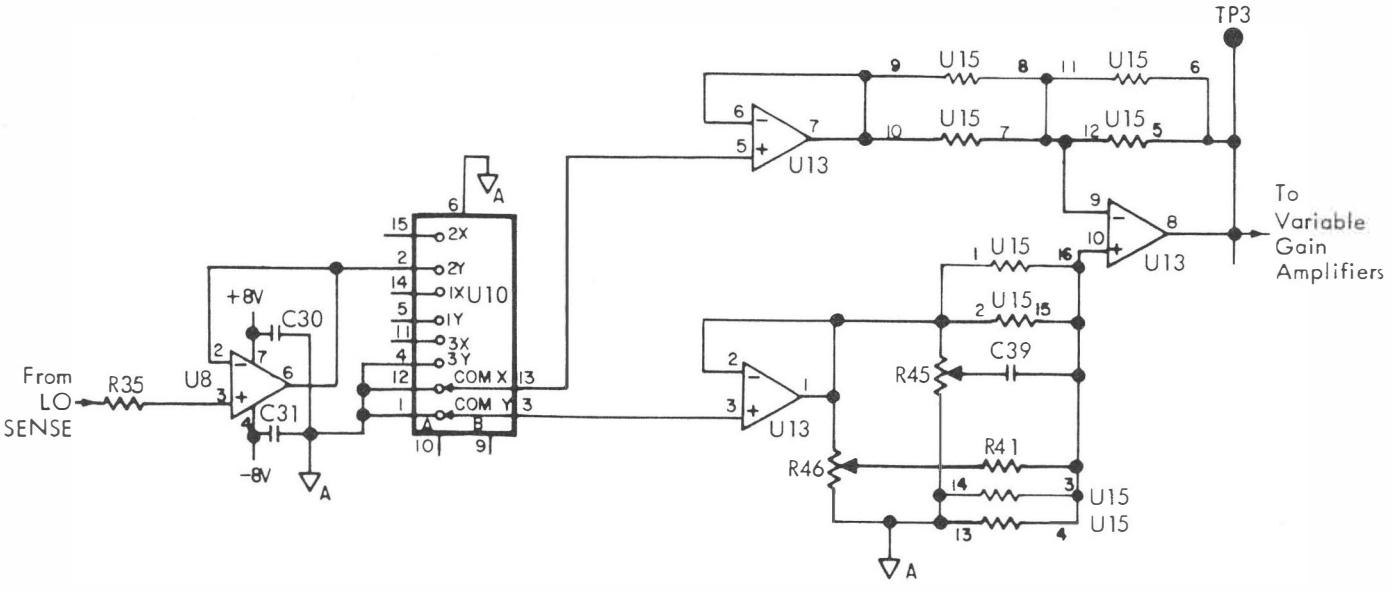

Figure 3-9. Differential Amplifier

The differential amplifier consists of 3 sections of quad-amplifier U13. Its input is sequentially selected by the input multiplexer U10. The mulitplexer selects either the voltage drop across the unknown, the voltage drop across the standard (range) resistor, or the 1.0V RMS reference voltage for measurement. The reference voltage is measured first. The measured reference voltage is recorded as a reference number of counts (A/D converter counts) against which the measured unknown and standard signals are compared.

3.3.2.6 Variable Gain Amplifier

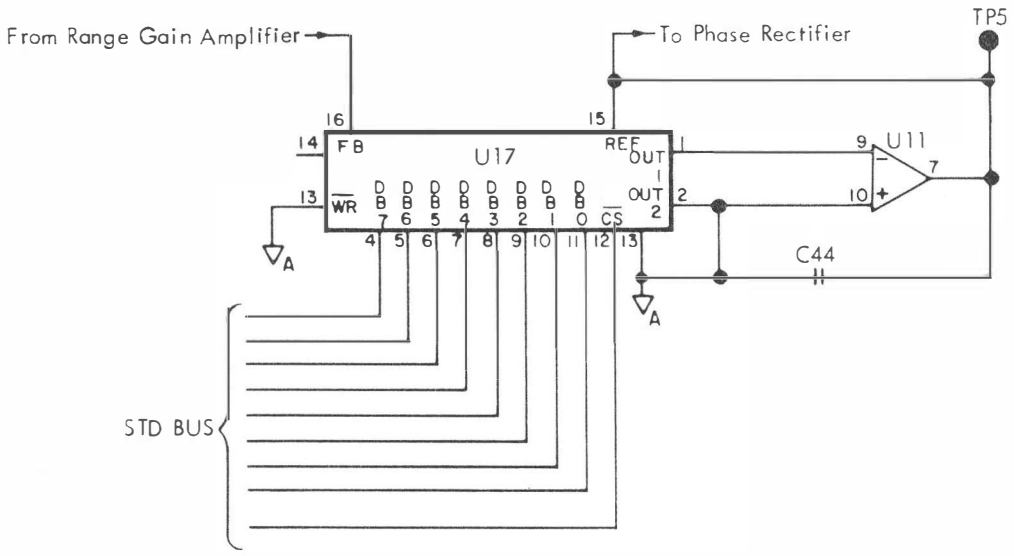

Figure 3-10. Variable Gain Amplifier

The variable gain amplifier (VGA), U17, works in conjunction with the level set and the range gain to boost the measured signal to the proper operating levels for the phase rectifier. The VGA is a programmable DAC capable of producing signal gains of 1 to 256.

3.3.2.7 Overload Detector

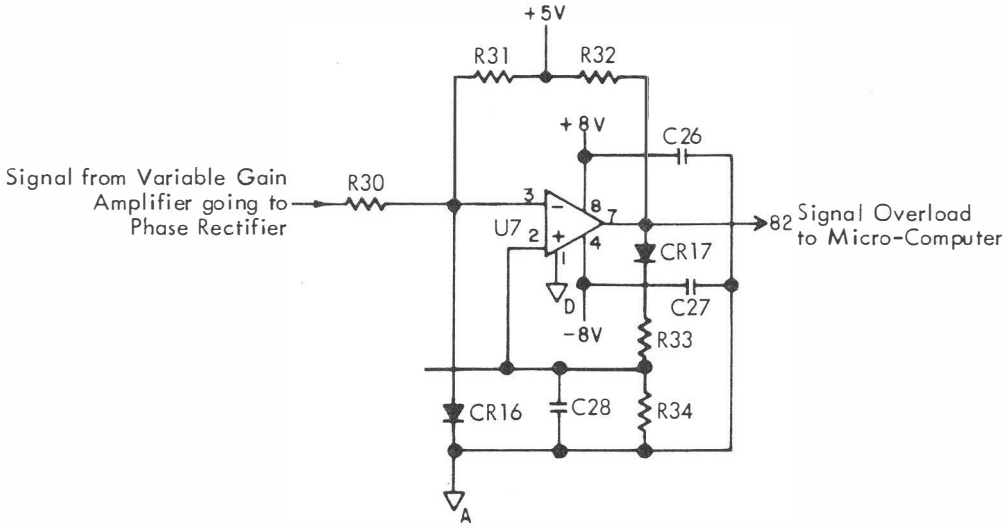

Figure 3-11. Overload Detector

Overload detector U7 monitors the signal going from the output of the variable gain amplifier to the phase rectifier. This peak detector indicates overload when the signal is too high. The detector's output goes HI when an overload occurs and the VideoBridge display results in an error message of "ERROR Analog".

See Section 2.11 for error message descriptions.

3.3.2.8 Phase Rectifier

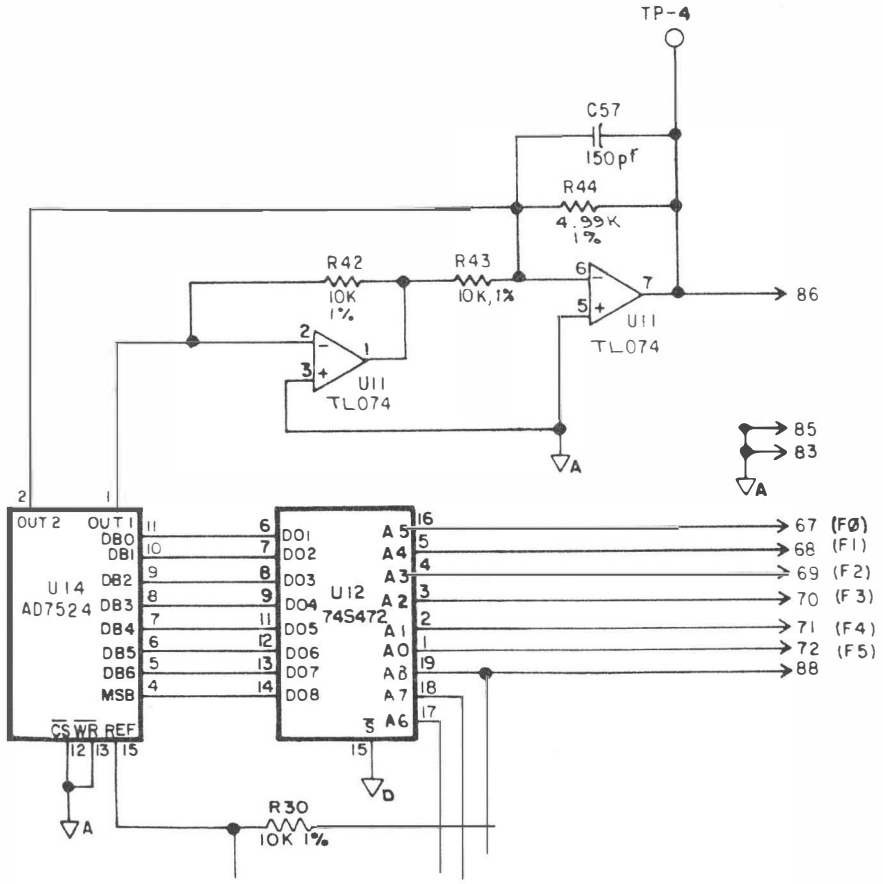

Figure 3-12. Phase Rectifier

The phase rectifier, shown in the Block Diagram, resides in U14, U12, and U11; a four quadrant, CMOS digital-to-analog converter. The phase rectifier is driven by a 512 x 8 bit PROM which does the synchronous gating needed to give a DC output. The PROM is driven by six input lines that are harmonics of the test frequency. Three other input lines are used to select the 0°/90° bit, 0°/180° bit, and LOW/HIGH frequency bit. This circuit provides a multiplier type action of phase detection. It takes the product of the sinewave (measured signal) coming in and the digitally related sinewave (from the PROM) to produce a DC current output. The current output of U14 is summed by two sections of operational amplifier U11 to produce a full wave voltage output.

3.4 MOTHERBOARD

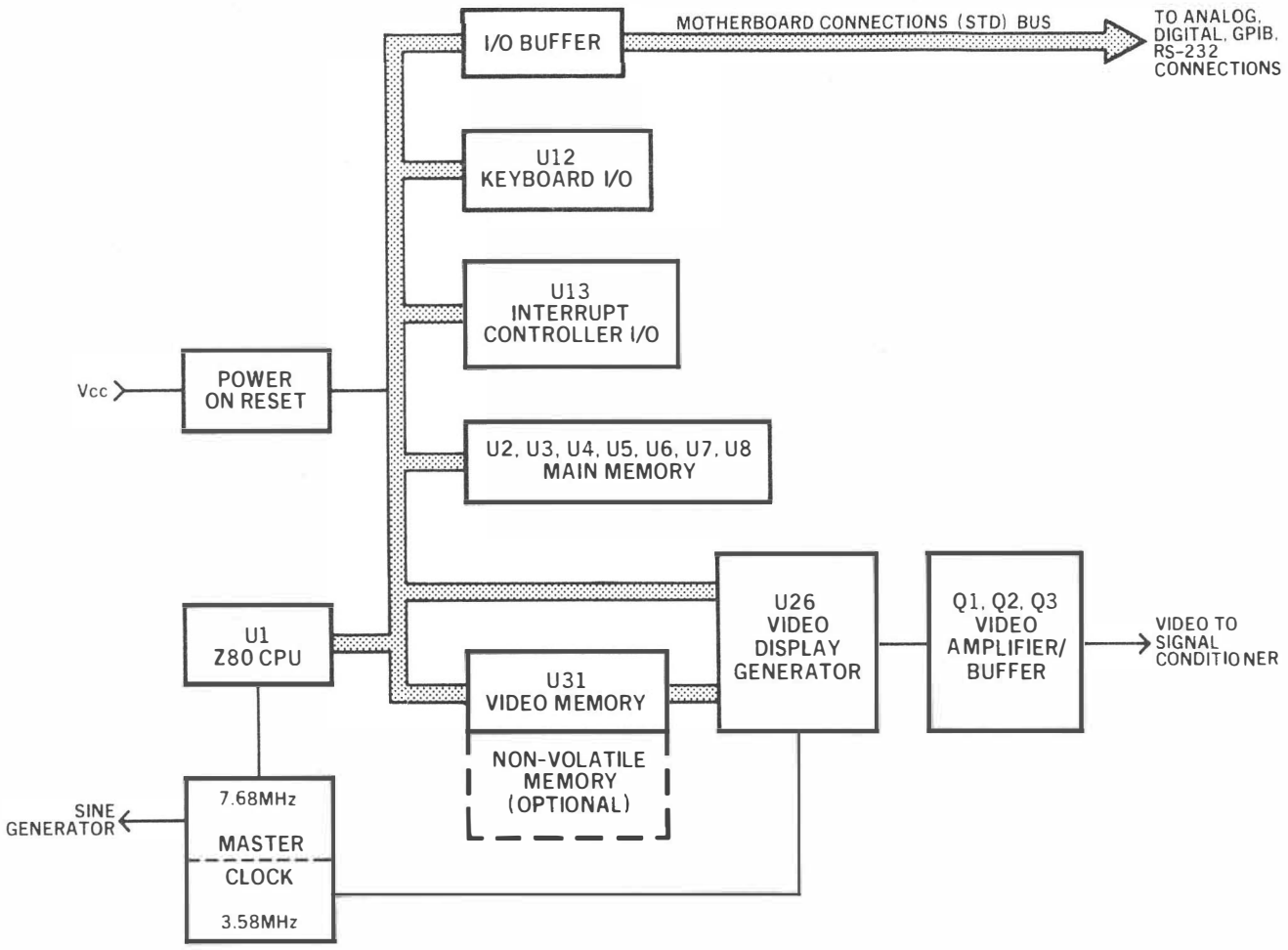

Figure 3-13. Motherboard Simplified Diagram

A simplified diagram of the motherboard is shown in Figure 3-13. The motherboard architecture centers on its standard communication bus which has 6 slots for plugging in circuit cards containing measurement circuitry, IEEE-488 interfacing circuitry, RS-232C interfacing circuitry, and other bus compatable devices. The motherboard holds the Z80 CPU chip and its memory, the video generator and its memory, the master clock, and associated control logic.

3.4.1 CPU

The central processing unit (CPU) used in the 2150/2160 is a Z80 microprocessor chip. It has complete control of all functions of the instrument and does all the calculations required to arrive at the desired measured quantity. The CPU, when joined with the keyboard I/O (U12), interrupt controller I/O (U13), and main memory PROM, ROM, or RAM (U2 thru U8), comprise the 2150/2160's internal microcomputer.

A computer bus exists to convey information from the CPU to its peripherals. To do this the CPU must supply, and the bus must convey certain specific information such as:

1. What information?
2. To whom? To what destination?
3. When is the information valid?
4. When is the destination name valid?

The exact information is conveyed over an 8 bit DATA bus, the source or destination of the information is conveyed over a 16 bit ADDRESS bus, and the "whens" are resolved by CONTROL lines. The DATA bus, ADDRESS bus, and CONTROL lines are combined into one set of parallel lines, on the motherboard, called the standard (STD) bus.

Any CPU can support only so many capacitive, and only so many DC loads. Expansion beyond these load limits requires buffering. All ADDRESS, DATA, and CONTROL lines are buffered before they are routed to the standard (STD) bus. Thus, all devices that talk to the CPU can be divided into two groups: those that exist on one side of the buffers (that talk directly to the CPU), and those that exist on the other side of the buffers (that talk to the CPU through the buffers). It is the job of the motherboard's logic to decide on which side of the buffers a device is and whether or not to enable those buffers. If an addressed device is on the CPU side of the buffers (INTERNAL), it needs to be singled out (SELECTED) before it can speak or be spoken to. Devices that are INTERNAL are:

1. Keyboard I/O, KDI18279, U12
2. Interrupt controller I/O, CTC3882, U13
3. Video display generator control, MC6847, U26
4. Video memory, RAM, U31
5. Main memory, PROM, ROM, or RAM

Logic on the motherboard is programmed to know the addresses of these INTERNAL devices. For all devices not INTERNAL, the motherboard logic presumes that they reside somewhere off the motherboard, and the appropriate buffers are enabled.

I/O decode is accomplished with two MSI (Medium Scale Integration) address comparators, U11 and U9. U11 is a comparator which is set to recognize a range of I/O addresses. This range is subdivided by the 74LS139 which is a 2:4 line decoder/selector. When U11 recognizes a valid INTERNAL I/O address it selects the decoder which resolves the address, allowing one particular INTERNAL I/O device to communicate with the CPU.

Memory decode is accomplished with U14, which is a 32 x 8 bit fused link ROM. The inputs to the ROM are address lines, the ROM is programmed to do a table lookup: "this address in, means this chip select out." The chip-select outputs are routed to one of the INTERNAL memory sockets (U2 thru U8). Note that U14 is doing the same job for the memory as the comparator and selector are for the I/O.

Also note that these are more than just address lines entering the comparator chips in both of the previous circuits, these are the CONTROL lines that tell the comparator when the address is valid and when a chip select can be output.

3.4.2 Standard Communications Bus

When the CPU addresses a device on the output side (EXTERNAL) of the CPU buffers, it also needs to be singled out (SELECTED) before it can speak or be spoken to. There are a number of lines, called the standard (STD) bus, that are dedicated to conveying address information, control signals, and data to and from these EXTERNAL devices. The STD bus has six locations for plugging in measurement and I/O dedicated devices. Standard bus signals and card edge connections are identified in Table 3-1. Devices that are serviced by the STD bus are:

1. Digital and Analog Measurement circuit assemblies.
2. GPIB circuit assembly (optional).
3. RS232 Interface circuit assembly (optional on 2150).
4. Cassette tape interface (Model 2160 only).

Table 3-1. Standard Bus Signals and Card Edge Connections

	PIN	MNEMONIC	SIGNAL FLOW	DESCRIPTION	PIN	MNEMONIC	SIGNAL FLOW	DESCRIPTION
LOGIC POWER BUS	1	+5 V	In	+5 Volts DC (Bussed)	2	+5 V	In	+5 Volts DC (Bussed)
	3	GND	In	Digital Ground (Bussed)	4	GND	In	Digital Ground (Bussed)
	5	-5V	In	-5 Volts DC	6	-5 V	In	-5 Volts DC
DATA BUS	7	D3	In/Out	Low Order Data Bus	8	D7	In/Out	High Order Data Bus
	9	D2	In/Out	Low Order Data Bus	10	D6	In/Out	High Order Data Bus
	11	D1	In/Out	Low Order Data Bus	12	D5	In/Out	High Order Data Bus
	13	D0	In/Out	Low Order Data Bus	14	D4	In/Out	High Order Data Bus
ADDRESS BUS	15	A7	Out	Low Order Address Bus	16	A15	Out	High Order Address Bus
	17	A6	Out	Low Order Address Bus	18	A14	Out	High Order Address Bus
	19	A5	Out	Low Order Address Bus	20	A13	Out	High Order Address Bus
	21	A4	Out	Low Order Address Bus	22	A12	Out	High Order Address Bus
	23	A3	Out	Low Order Address Bus	24	A11	Out	High Order Address Bus
	25	A2	Out	Low Order Address Bus	26	A10	Out	High Order Address Bus
	27	A1	Out	Low Order Address Bus	28	A9	Out	High Order Address Bus
	29	A0	Out	Low Order Address Bus	30	A8	Out	High Order Address Bus
CONTROL BUS	31	WR*	Out	Write to Memory or I/O	32	RD*	Out	Read to Memory or I/O
	33	IORQ*	Out	I/O Address Select	34	MEMRQ*	Out	Memory Address Select
	35	IOEXP*	In/Out	I/O Expansion	36	MEMEX*	In/Out	Memory Expansion
	37	REFRESH*	Out	Refresh Timing	38	MCSYNC*	NA	CPU Machine Cycle Sync
	39	STATUS 1*	Out	CPU Status (Z80-M1)	40	SATUS 0*	Out	CPU Status
	41	BUSAK*	Out	Bus Acknowledge	42	BUSRQ*	In	Bus Request
	43	INTAK*	Out	Interrupt Acknowledge	44	INTRQ*	In	Interrupt Request
	45	WAITRQ*	In	Wait Request	46	NMIRQ*	In	Non-Maskable Interrupt
	47	SYSRESET*	Out	System Reset	48	PBRESET*	In	Push Button Reset
	49	CLOCK*	Out	Clock Processor 4.0MHz	50	CNTRL*	In	CPU Clock 3.84MHz
	51	PCO*	Out	Priority Chain Out	52	PCI*	In	Priority Chain In
POWER BUS	53	AUX GND	In	AUX Ground (Bussed)	54	AUX GND	In	AUX Ground (Bussed)
	55	AUX + V	In	AUX Positive (+12 Volts DC)	56	AUX - V	In	AUX Negative (-12 Volts DC)

*Low Level Active Indicator

3.4.3 Extra Bus

Some EXTERNAL devices used in the 2150/2160 communicate with signals that are not compatible with the STD bus. For these devices, a second proprietary bus called the extra bus is used. The extra bus is designed to carry analog signals as well as digital information. The extra bus transmits the following major signal categories (see Table 3-2 for a further breakdown of signals):

1. 7.68MHz clock signal
2. Sinewave test signals
3. Chip select signals
4. Measurement cycle and zero crossing information
5. Remote start

Table 3-2. Extra Bus Signals and Card Edge Connections

PIN	MNEMONIC	DESCRIPTION	PIN	MNEMONIC	DESCRIPTION
57	AUX GND	AUX Ground (Bussed)	58	AUX GND	AUX Ground (Bussed)
59	AUX +V	AUX Positive (+12VDC)	60	AUX -V	AUX Negative (-12VDC)
61	IO1	I/O Select	62	IO2	I/O Select
63	IO3	I/O Select	64	IO4	I/O Select
65	60Hz	60 Hz Square Wave	66	7.68MHz	128 x 60kHz
67	F0	Test Frequency Square Wave	68	F1	2 x F0 (F0→F6 connect to sine ROM Address Pins)
69	F2	4 x F0 (F0→F6 connect to sine ROM Address Pins)	70	F3	8 x F0
71	F4	16 x F0	72	F5	32 x F0
73	F6	64 x F0	74	$\overline{\text{FINE GATE}}$	Analog Gate Control
75	$\overline{\text{HI GATE}}$	Analog Gate Control	76	$\overline{\text{LO GATE}}$	Analog Gate Control
77	$\overline{\text{Z GATE}}$	Analog Gate Control	78	$\overline{\text{JNK}}$	Analog Gate Control
79	HI CMP	Comparator Contol	80	LO CMP	Comparator Control
81	Z CMP	Comparator Control	82	SIG OVERLOAD	Comparator Control
83	SINE GND	Ground	84	SINEWAVE	Buffered Sinewave
85	LO-V_{IN}	A/D Converter Control	86	HI-V_{IN}	A/D Converter Control
87			88		
89			90		
91			92		
93			94		
95	$\overline{\text{CPU BUSY}}$	Indicates Internal Process	96	$\overline{\text{START}}$	Start Measurement
97	-7.5V	500mA CMOS Switches	98	+7.5V	500mA CMOS Switches
99	GND	Ground	100	GND	Ground

3.4.4 Clock Signals

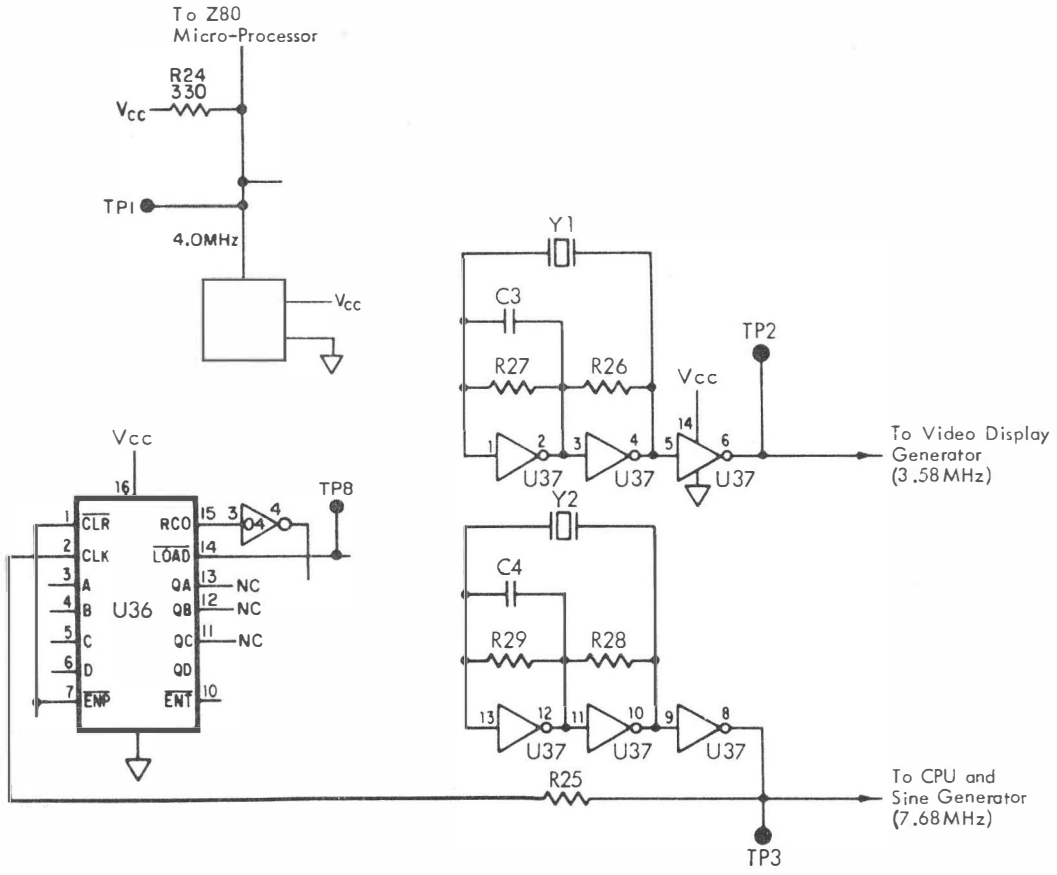

Figure 3-14. Clock Signals

Three clock oscillators are located on the motherboard. One clock signal of 4.0MHz is sent to the CPU to set processor speed. It can be monitored at TP1.

A second clock signal is a "color burst" frequency (3.58MHz) produced by Y1 and used for the video display generator. It can be monitored at TP2.

The third clock signal of 7.68MHz is produced by Y2 and divided by 128 to provide the 60kHz base frequency used by the sine generator. It can be monitored at TP3.

3.4.5 Power ON Reset

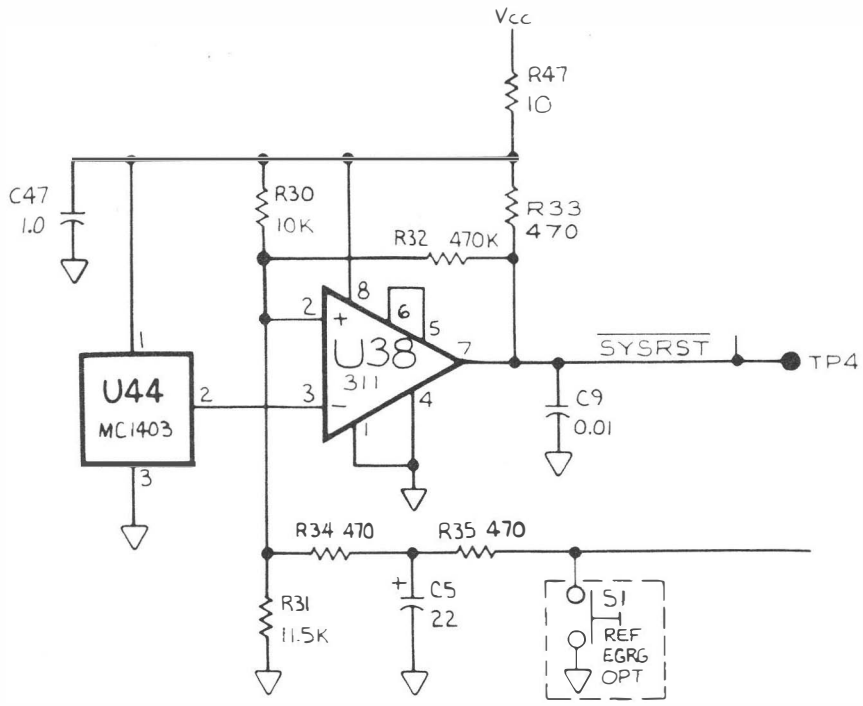

Figure 3-15. Power ON Reset

The power ON reset circuitry is necessary because of the long power-up time of the switching power supply. During power-up, the output of U38 (SYSRST) is active LO. This resets all logic circuitry and maintains this level until V_{cc} reaches 4.8 volts. Capacitor C5 then provides a slight time delay of about 1/10 second before the output of U38 is allowed to go HI and release the reset line. If V_{cc} should subsequently fall below 4.5 volts (usually due to line voltage variances), SYSRST will again go LO until V_{cc} is restored to its operating level of 4.8 volts.

3.4.6 Video Display Generator

The video display generator (VDG) is a Motorola MC6847 which accepts a binary control word gated into it from the microcomputer. In response to that binary input, the VDG creates characters, graphic, and semi-graphic information that is output in a format that corresponds to a normal television raster scan arrangement.

The VDG has memory chip U31 associated with it which stores a screen of information to be scanned and displayed. The video memory has two operating modes. Initially, the VDG has access to the memory and is always scanning and converting the memory contents to characters then sends those characters out to the video display. When the processor is ready to read or write a character into that memory, it goes through a piece of arbitration logic that says, if the video display generator is doing a horizontal sync, a horizontal retrace, or a vertical sync, then grant the processor access to the memory. However, if the VDG is not doing horizontal sync or vertical sync, then it is putting video out and must not be interrupted. At that point the processor is told to wait, treating the video memory like slow memory. The processor will wait, keeping the address, data, and control lines activated, until a horizontal sync or a vertical sync is output, then the memory returns to normal operation and readily accepts new inputs from the processor.

The composite video, as it comes out of the VDG chip, is a very low level signal. The signal is high impedance in nature and is very susceptible to noise and interference. To counteract these undesirable qualities, there is a two transistor amplifier/buffer (Q1, Q2,) that transforms the VDG output signal into a higher level, low impedance output signal. This output signal drives the video section of the 2150/2160.

3.5 VIDEO CIRCUITRY

DANGER

THE VIDEO CIRCUITRY CONTAINS DANGEROUSLY HIGH VOLTAGE. EXERCISE EXTREME CARE TO AVOID POSSIBLE ELECTRIC SHOCK WHICH MAY RESULT IN SEVERE INJURY OR DEATH.

All video display circuitry for the 2150/2160 is contained on one circuit card. It provides all the signal processing required for displaying video information on the CRT screen. Operation of the video circuitry is discussed in the following paragraphs.

Refer to Section 5, schematic diagram P/N 48642 for the following discussions.

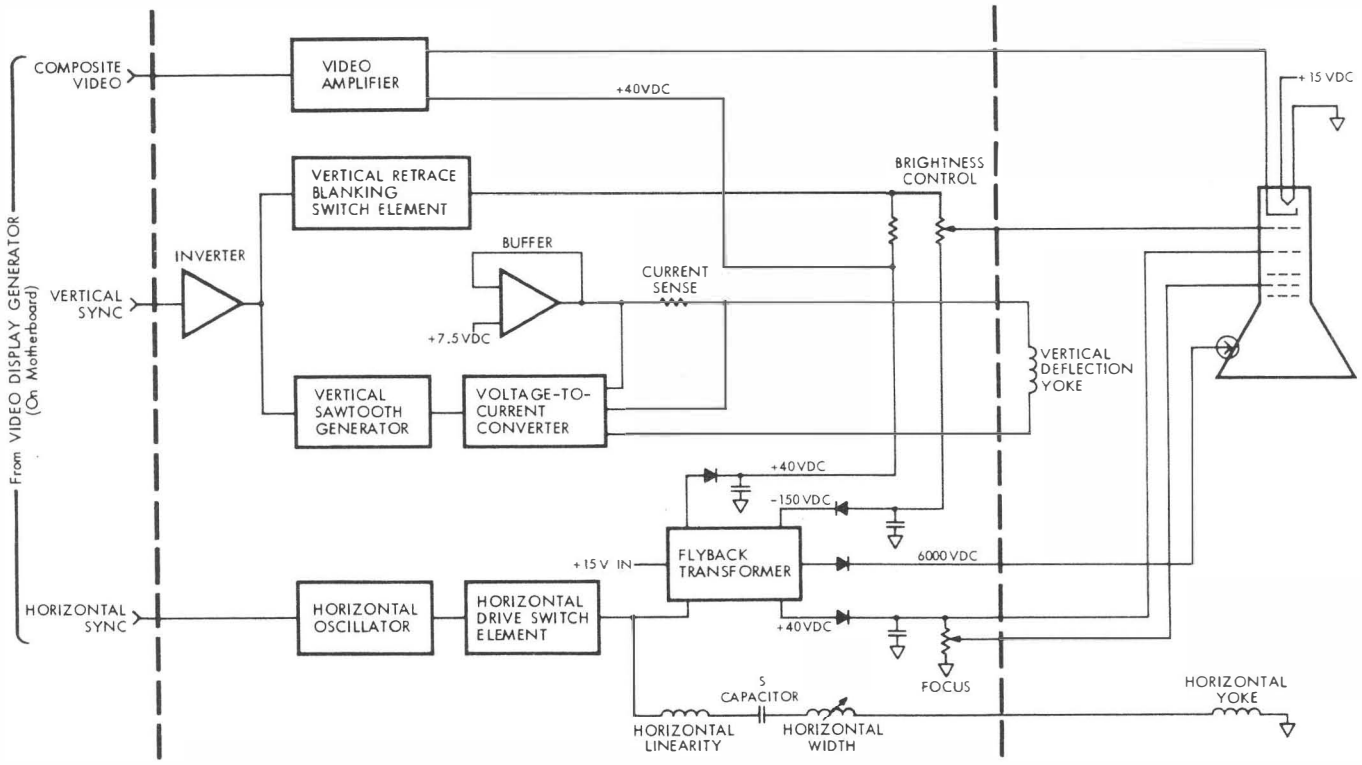

Figure 3-16. Video Circuit Block Diagram

3.5.1 Video Amplifier

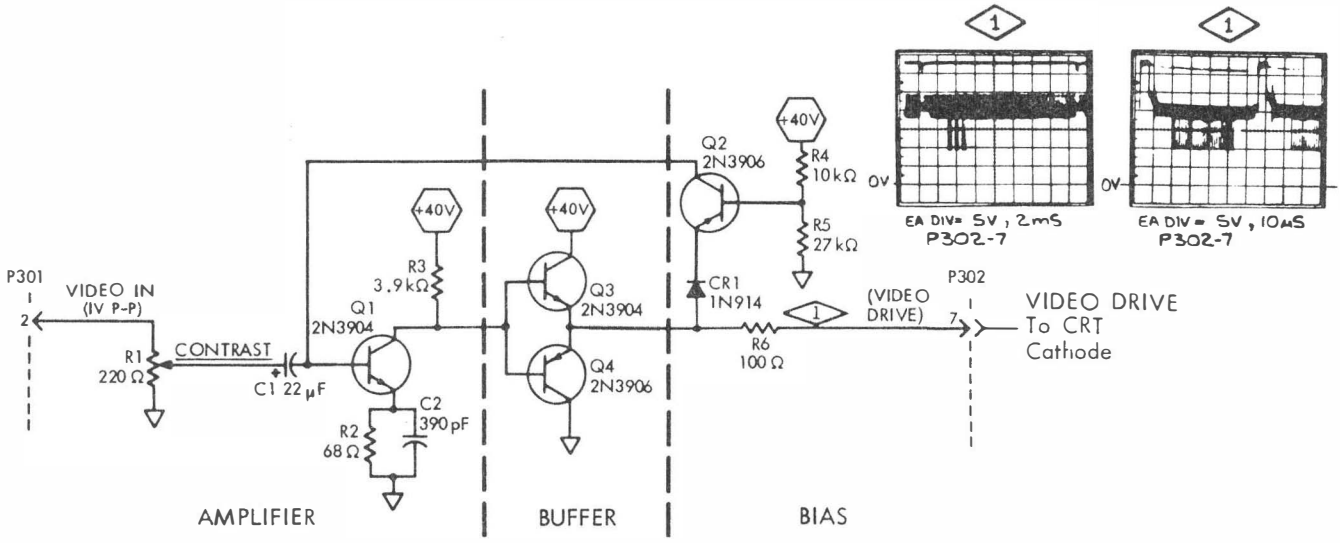

Figure 3-17. Video Amplifier

The Video Amplifier circuitry serves two purposes:

1. Amplify the composite video signal from the Video display generator.

2. Drive the CRT cathode with the necessary signal to produce the display.

The following paragraphs will discuss these two functions in detail.

The composite video input signal is applied to potentiometer R1, the contrast control. The contrast control adjusts the level of the composite video signal going to the Video Amplifier. This signal is coupled through capacitor C1 to a fixed gain amplifier consisting of Q1, R3, R2, and C2. The AC gain of the stage is fixed by R3, R2, and emitter bypass capacitor, C2. Capacitor C2 is matched against circuit board strays to maintain the bandwidth of the stage at 10MHz. Transistors Q3 and Q4 act as a buffer for amplifier Q1.

Bias for Q1 is derived from the DC restoration circuitry consisting of

3.5 VIDEO CIRCUITRY

DANGER

THE VIDEO CIRCUITRY CONTAINS DANGEROUSLY HIGH VOLTAGE. EXERCISE EXTREME CARE TO AVOID POSSIBLE ELECTRIC SHOCK WHICH MAY RESULT IN SEVERE INJURY OR DEATH.

All video display circuitry for the 2150/2160 is contained on one circuit card. It provides all the signal processing required for displaying video information on the CRT screen. Operation of the video circuitry is discussed in the following paragraphs.

Refer to Section 5, schematic diagram P/N 48642 for the following discussions.

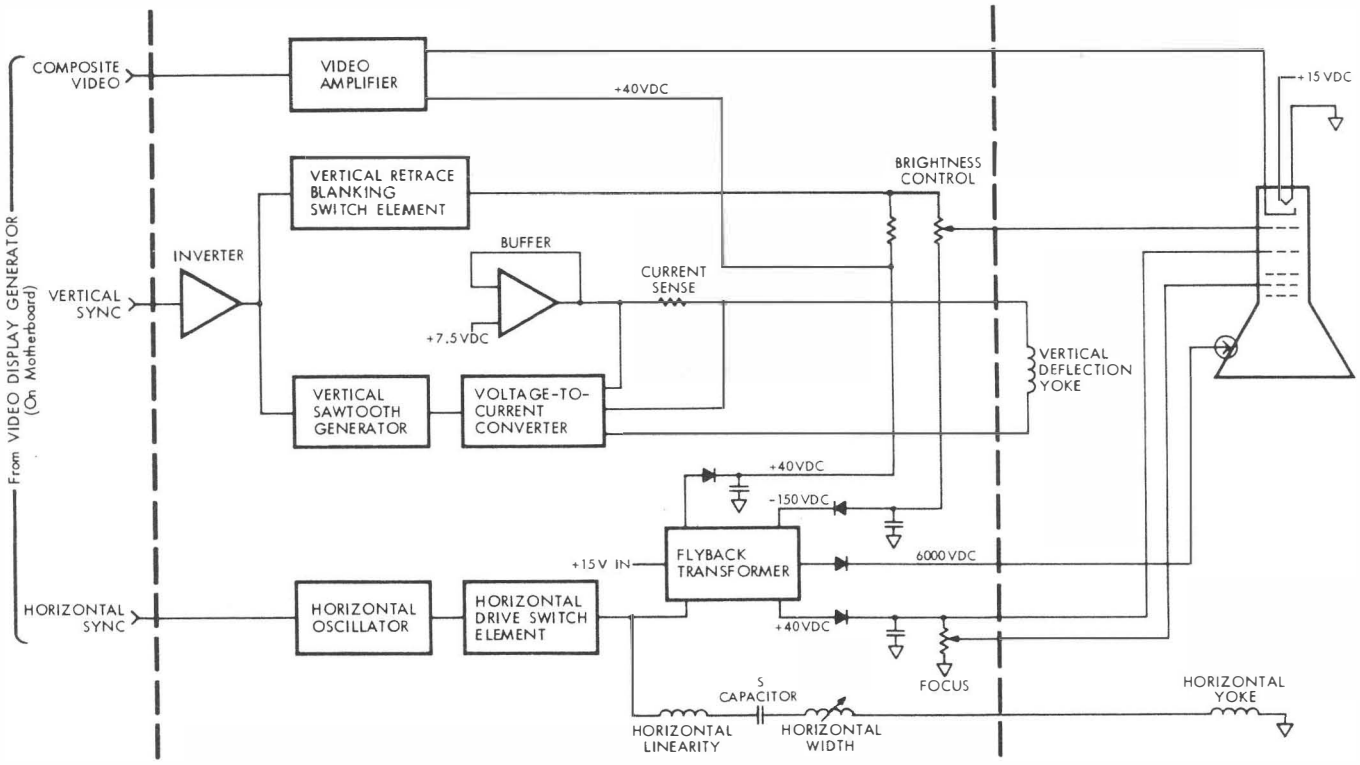

Figure 3-16. Video Circuit Block Diagram

Q2, R4, R5, and CR1. When the 1V p-p video input signal, as applied to Q1, is in its negative peak, amplifier Q1 is turned off. This causes transistor Q1's collector to rise toward +40VDC supply. This rising voltage is fed through buffer pair Q3 and Q4, and diode CR1 to the emitter of Q2. When the DC voltage on Q2's emitter exceeds the base bias, determined by voltage divider R4 and R5, transistor Q2 turns on. This current charges coupling capacitor C1 providing bias for Q1. During the rest of the video input cycle, Q1 is turned on forcing its output below Q2's bias point turning off Q2. During this part of the cycle, C1 begins to discharge through the Base/Emitter junction of Q1. However, because the discharge path for C1 is through a high impedance path of Q1, C1 loses only a minimal amount of charge before the charging cycle is repeated. Thus, a constant bias is provided for Q1.

Resistor R6 provides current limiting for Q3 and Q4 should the output at pin 7 be shorted to ground. The output of the stage can have voltage swings in the vicinity of 0VDC to 30VDC which are the levels required when composite video is applied to the cathode of the CRT. These voltage swings will turn the CRT from full-on to full-off providing crisp black and green, and some half-tone displays.

3.5.2 Vertical Retrace Blanking

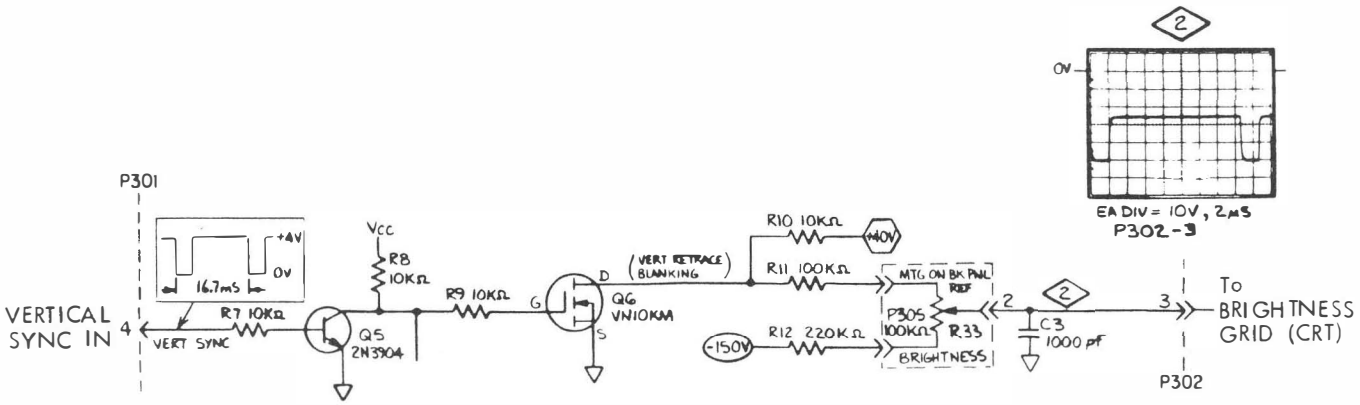

Figure 3-18. Vertical Retrace Blanking

One of the requirements of a video circuit such as the one used in the 2150/2160 is blanking the electron beam whenever one frame has been completed and the electron beam is going to be retraced from the end of one frame up to the beginning of the next one.

The Vertical Sync signal is fed to inverter Q5 which in turn feeds the signal to the gate of a VFET, Q6. Transistor Q6 provides the blanking signal during the vertical retrace. When the Vertical Sync signal is in its active state as a low-going peak at P301 - Pin 4, inverter Q5 is in its off condition. With Q5 off, Q6 turns on forcing the junction of R10 and R11 to ground. With R10 and R11 at ground, the potential at the wiper of potentiometer R33 is -40VDC as set by the voltage divider of R11, R33, and R12. This -40VDC is fed to the brightness grid of the CRT, producing a black display. When the Vertical Sync signal is in its inactive state as a high level at P301 - Pin 4, Q5 is turned on forcing Q6 off. With Q6 off, the junction of R10 and R11 becomes more positive as determined by the divider string of R10, R11, R33 and R12. With the junction of R10 and R11 at a more positive potential, then the wiper of R33 becomes less negative such that the proper bias is supplied to the brightness grid producing a green display. Potentiometer R33 is available at the rear of the 2150/2160 for adjusting the brightness of the display.

Capacitor C3 provides a low impedance path for electostatic noise which could be coupled into the brightness grid from the flyback transformer causing brightness variations.

3.5.3 Vertical Drive

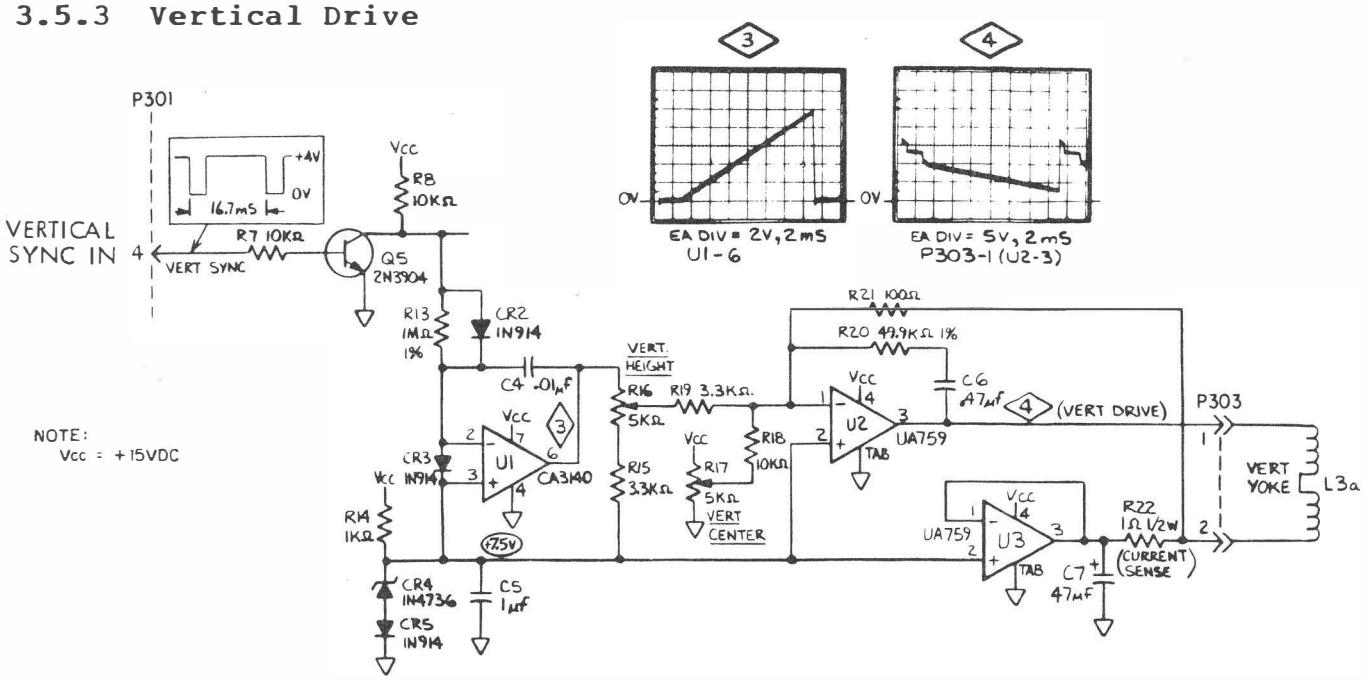

Figure 3-19. Vertical Drive

The Vertical Sync signal comes in on pin 4 of P301 and is fed to inverter Q5. Amplifier U1 is the active element for the vertical sawtooth generator. The vertical sawtooth generator transforms these vertical sync input pulses into a linear, sawtooth voltage waveform that will eventually drive the vertical deflection yoke. The sawtooth generator operates as follows:

During the positive portion of the vertical sync signal, inverter Q5 is turned on pulling its output low. This provides a near ground signal to the input resistor of U1 (R13) causing the feedback capacitor C4 to charge in a positive direction. Capacitor C4, resistor R13, and the voltage across R13 define the slope of the rising output. During the low level of the vertical sync signal, inverter Q5 is turned off with its output pulled to +15VDC by pull-up resistor R8. This provides a positive signal to the inverting input of U1 causing the feedback capacitor C4 to discharge back to zero. The discharge rate is much faster than the charge rate due to the action of diode CR2 which is forward biased during the low level of the vertical sync pulse, yielding a slope much greater than that during the positive part since R13 is bypassed during this cycle.

The voltage-to-current converter, U2, transforms the sawtooth voltage waveform at its input resistor, R19, to a sawtooth current at its output to drive the vertical yoke. Resistor R16 provides vertical height adjustment of the picture on the CRT by controlling the amplitude of the sawtooth waveform from the sawtooth generator. Resistor R17 is a DC offset adjustment for U2 which allows for adjusting the vertical centering of the picture on the CRT.

Amplifier U3 is a buffer between the common bus and sense resistor R22. Resistor R22 senses the current from the voltage-to-current converter U2. The resultant voltage drop across R22 is summed with the output from U1 and fed back to the input to U2. The action of the R22 sense feedback is referenced against a stable common bus to maintain linearity throughout the vertical sweep. Resistor R20 and capacitor C6 prevent amplifier U2 from oscillating while driving the vertical yoke.

3.5.4 Horizontal Drive

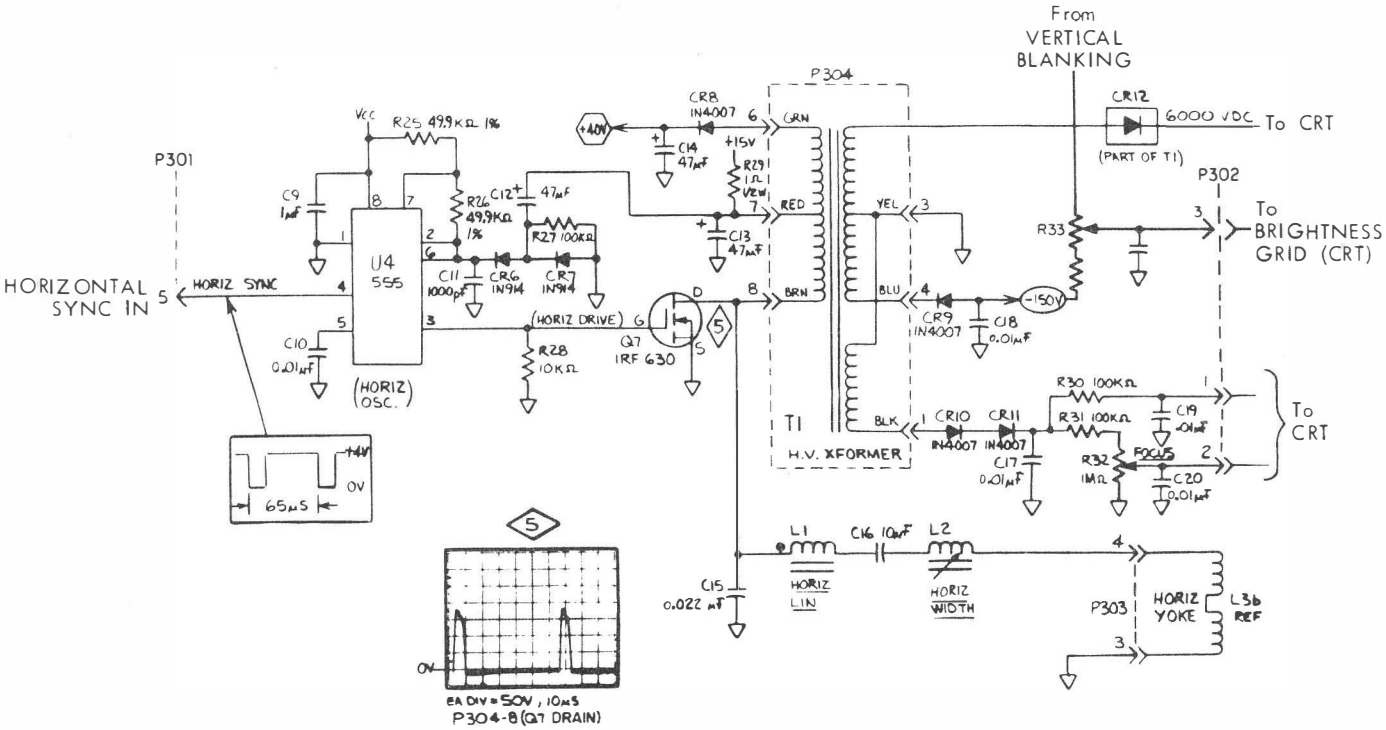

Figure 3-20. Horizontal Drive and High Voltage

3.5.4 Horizontal Drive

The Horizontal Sync signal comes in on pin 5 of P301 and is fed to the horizontal oscillator, U14. The synchronized oscillator is used to provide drive of the appropriate duty cycle to the main horizontal switching transistor Q7, a VMOS power FET. The horizontal oscillator has a startup delay circuit consisting of C12, R27, CR6 and CR7 to allow the power supply to stabilize before drive is applied to Q7. When Q7 is turned on, a current flows into the primary of T1 storing energy as a magnetic field in the core of T1. At the same time, charging current is supplied to capacitor C14 to supply the 40VDC required for the video amplifier and vertical retrace blanking circuits. When Q7 is turned off, energy in the core is supplied through the horizontal width and horizontal linearity controls (L1, C16, and L2) to the deflection yoke. The magnetic field produced by the deflection yoke sweeps the electron beam across the CRT face. Horizontal position is proportional to the amount and polarity of current flowing through the deflection yoke. Capacitors C15 and C16, and linearity coil L1 provide proper wave shaping of the deflection signal. Energy stored in the core of T1 is also supplied to the secondary of T1 providing the voltages necessary for cathode ray tube operation. Diode rectifiers CR9, CR10, CR11, and CR12 develop the DC accelerating and focusing voltages for the CRT. The high voltage at the CRT's anode, for final electron acceleration, is 6kVDC. Display brightness and focus are controlled by R33 and R32 respectively.

3.5.5 Video Control Summary

This section describes the video controls available for adjusting the quality of the CRT display. The video adjustments described in this section are set for the best possible display at the factory just prior to shipping and need be repeated only under extreme circumstances. (Note the following CAUTION.)

WARNING

REMOVAL OF INSTRUMENT COVERS MAY CONSTITUTE AN ELECTRICAL HAZARD AND SHOULD BE ACCOMPLISHED BY QUALIFIED SERVICE PERSONNEL ONLY.

CAUTION

THE BRIGHTNESS CONTROL LOCATED AT THE REAR OF THE INSTRUMENT CAN BE EASILY DISTURBED WHEN WRAPPING THE POWER CORD ON THE REAR FEET. VERIFY THE CORRECT SETTING OF THIS CONTROL BEFORE CONTINUING WITH ADDITIONAL ADJUSTMENTS.

CAUTION

IF THE INSTRUMENT IS PLACED WITHIN A STRONG MAGNETIC FIELD, THE VIDEO DISPLAY MAY BECOME PERMANENTLY OFFSET. IF THIS CONDITION OCCURS, DEGAUSSING THE VIDEOBRIDGE CASE IS REQUIRED TO RETURN THE DISPLAY TO NORMAL OPERATION. THIS MUST BE DONE BEFORE CONTINUING WITH ADDITIONAL ADJUSTMENTS.

Equipment Required:

Flat blade plastic trim tool or "tweaker" (steps 2,3,5,6)

Hex head plastic trim tool (horizontal width, step 4)

Video Adjustments: (See also Table 3-3)

STEP 1. BRIGHTNESS Control - is a knob located on the instrument's rear panel and can be adjusted by hand. Brightness ranges from black (no display) to full brightness.

To make the following adjustments, remove the outer blue cover per instructions given in Section 4.4.2.2 Removal/Replacement Procedure.

The following adjustments are available through the side of the CRT Enclosure Cover. (Refer to Figure 3-21 for trimmer locations.)

WARNING

TO AVOID ELECTRIC SHOCK FROM DANGEROUSLY HIGH VOLTAGES, USE ONLY INSULATED PLASTIC TRIM TOOLS TO PERFORM THE VIDEO ADJUSTMENTS DESCRIBED BELOW.

STEP 2. FOCUS Control - adjusts the detail of the displayed characters for maximum sharpness. Make adjustment while observing the characters at the center of the CRT display.

STEP 3. VERTICAL CENTER - adjusts the relationship for the entire display by moving the vertical frame either up or down.

STEP 4. HORIZONTAL WIDTH (use hex head tool) - adjusts the size of the display by setting the left and right boundaries. The horizontal boundaries for the displayed picture can be compressed or expanded for best display size.

CAUTION

USE OF ANY OTHER TOOL THAN THE RECOMMENDED HEX HEAD PLASTIC TRIM TOOL MAY RESULT IN ELECTRICAL SHOCK OR DAMAGE TO THE TUNING SLUG.

STEP 5. VERTICAL HEIGHT - adjusts the size of the display by setting the top and bottom boundaries. The vertical boundaries for the displayed picture can be compressed or expanded for best display size.

STEP 6. CONTRAST Control - adjusts the ratio of the brightness of the displayed characters to the background color.

Table 3-3 is provided as a summary for the video adjustments and includes reference to trimmer locations and sections where additional information is available.

Table 3-3. Summary of Video Controls

ITEM	CONTROL	DESCRIPTION	CIRCUIT DESCRIPTION REFERENCE
(1)	BRIGHTNESS	Adjusts the brightness of the CRT display	Section 3.5.2 Section 3.5.4
(2)	FOCUS	Adjusts the detail of the displayed characters on the CRT display	Section 3.5.4
(3)	VERTICAL CENTER	Moves the vertical frame either up or down	Section 3.5.3
(4)	HORIZONTAL WIDTH	Adjusts the horizontal size by setting left and right boundaries	Section 3.5.4
(5)	VERTICAL HEIGHT	Adjusts the vertical size by setting top and bottom boundaries	Section 3.5.3
(6)	CONTRAST	Adjusts the ratio of the brightness of the displayed characters to the background color	Section 3.5.1

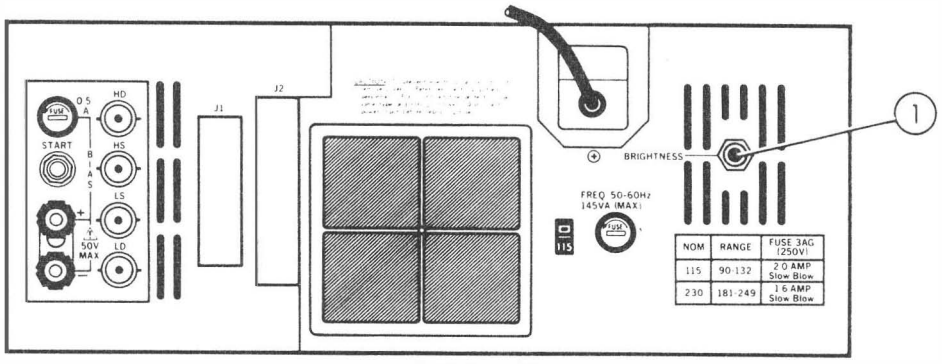

REAR PANEL

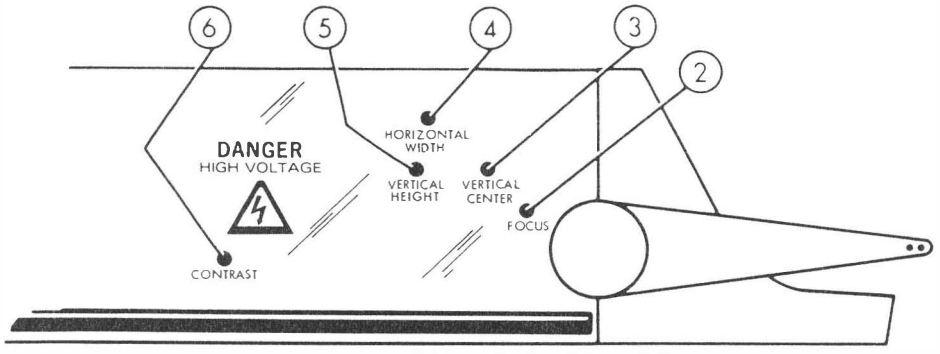

OUTER SIDE CRT ENCLOSURE COVER

Figure 3-21. Video Control Trimmer Locations

3.6 POWER SUPPLY

WARNING

ALL PARTS OF THE POWER SUPPLY ASSEMBLY INCLUDING INPUT CIRCUIT COMMON ARE AT OR ABOVE POWER LINE VOLTAGE. THE ENERGY AVAILABLE AT ANY POINT ON THE ASSEMBLY MAY BE LIMITED ONLY BY THE INPUT FUSE. DO NOT ATTEMPT SERVICE OPERATIONS. FAILURE TO OBSERVE THIS WARNING MAY RESULT IN SEVERE INJURY OR DEATH.

The Power Supply, under normal conditions, has very dangerous high voltages. Do not attempt to troubleshoot the power supply. If the power supply is suspected of being faulty, send the entire instrument back to ESI for servicing. To determine if a problem exists in the power supply, look at the five LEDs located on the motherboard (see Figure 3-22). Should one or more of these LEDs be dim or dark, the power supply may be faulty and the instrument should be sent to ESI. If all five LEDs are illuminated, the trouble is not in the power supply and normal troubleshooting procedures should be continued.

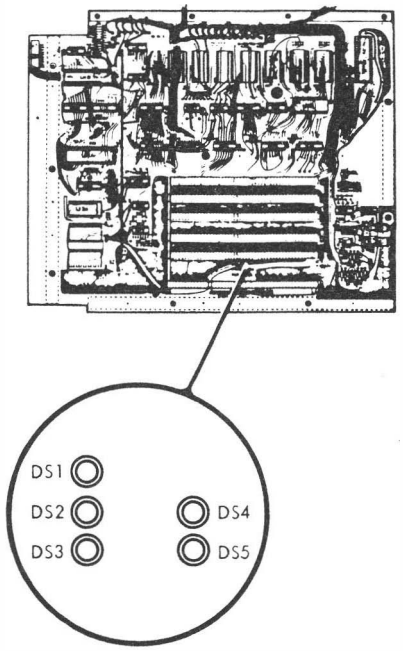

Figure 3-22. Power Supply Diagnostic LED Locations

SECTION 5
PARTS LISTS AND DIAGRAMS

5.1 2150/2160 FINAL ASSEMBLY (P/N 32150, 32160)

CIRCUIT NO.	DESCRIPTION	ESI PART NO.
	SUBASSEMBLY, FRONT END	46096
	SUBASSEMBLY, CRT CASE	46095
	CIRCUIT ASSEMBLY, MOTHERBOARD	54569
	CIRCUIT ASSEMBLY, DIGITAL BOARD	53522
	CIRCUIT ASSEMBLY, ANALOG BOARD	53675
	CIRCUIT ASSEMBLY, CASSETTE/RS-232 (2160 ONLY)	52674
	ASSEMBLY, POWER SUPPLY MODULE	45845
	PIVOT ROD	45367
	BACK PANEL, RH	44964
	SIDE PANEL, RH	44931
	CABLE MOTHERBOARD-TO-KEYBOARD	47112
	COVER, CRT CASE	45078
	STRAIN RELIEF BRACKET	45081
	BRACKET ANGLE, SIDE PANEL	46288
	POWER CORD	24077
	LABEL (WARNING DANGEROUS VOLTAGE)	46047
	SHIELD, SIDE, POWER SUPPLY	45957
	CASSETTE, TAPE (2160 ONLY)	55852
	MANUAL, SERVICE 2150/2160	54327
	WELDMENT, CASE	45157
	CORD WRAP	45782
	FEET, 0.75SQ x 0.5 HIGH	46446
	FEET, ROUND 0.5 DIA	04276
	ASSEMBLY, CONNECTOR COVER, HANDLER	46947
	CABLE ASSEMBLY, TAPEDECK-TO-RS232 (2160 ONLY)	47254
	HOLDER, PC BOARD	46287
	ASSEMBLY, CONNECTOR COVER, IEEE (2150 ONLY)	46948

5.2 FRONT END SUBASSEMBLY (P/N 46096)

CIRCUIT NO.	DESCRIPTION	ESI PART NO.
	END CAP, LH, PAINTED	47271
	END CAP, RH, PAINTED	47272
	EXT, UPPER CUT	44818
	EXT, LOWER CUT	44958
	BRACKET, UPPER LH	44828
	BRACKET, UPPER RH	44827
	BRACKET, LOWER	44826
	BRACKET, SIDE PANEL	45213
	SUB PANEL, UPPER RH (2160 ONLY)	45337
	FRONT PANEL, UPPER LH	45338
	REMOVABLE WINDOW, CRT	53590
	FRONT PANEL, UPPER RH (2160 ONLY)	53677
	FRONT PANEL, LOWER	45340
	BUTTON, KEYBOARD (MIST GRAY/WHITE)	45608
	BUTTON, KEYBOARD (BLU)	46510
	BUTTON, KEYBOARD (GRAY)	45348
	HANDLE, PAINTED	47166
	PIVOT, PLASTIC HANDLE	44892
	PIN, HANDLE	44894
	COVER, HANDLE	44895
	BUTTON, HANDLE	44896
	SPRING, HANDLE	44897
	PLATE, HANDLE SIDE	44891
	SPACING STRIP, MOTHERBOARD	45351
	SPRING, TAPEDECK BUTTON (2160 ONLY)	46331
	SPACER, TAPEDECK BUTTON (2160 ONLY)	46332
	TAPEDECK (2160 ONLY)	53870
	ALPHA KEYBOARD OVERLAY (2160 ONLY)	55413
	CIRCUIT ASSEMBLY, KEYBOARD	45573
	FOOT, ROUND STICKY	22343
	SUB PANEL, UPPER RH (2150 ONLY)	45374
	FRONT PANEL, UPPER RH (2150 ONLY)	57679

5.2.1 Keyboard Circuit Assembly (P/N 45573)

CIRCUIT NO.	DESCRIPTION	ESI PART NO.
	PC BOARD, KEYBOARD	45572
S1-S32	SWITCH, MOMENTARY, PUSHBUTTON	46500
P501	HEADER, I/O, 20 CONTACT RTANG	46501

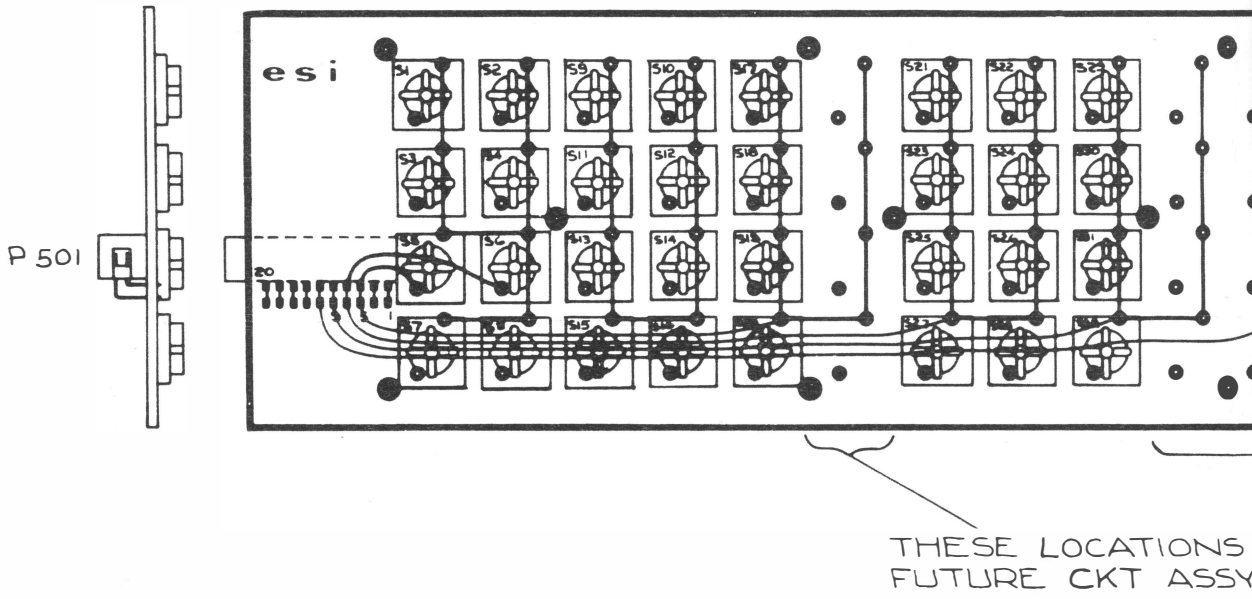

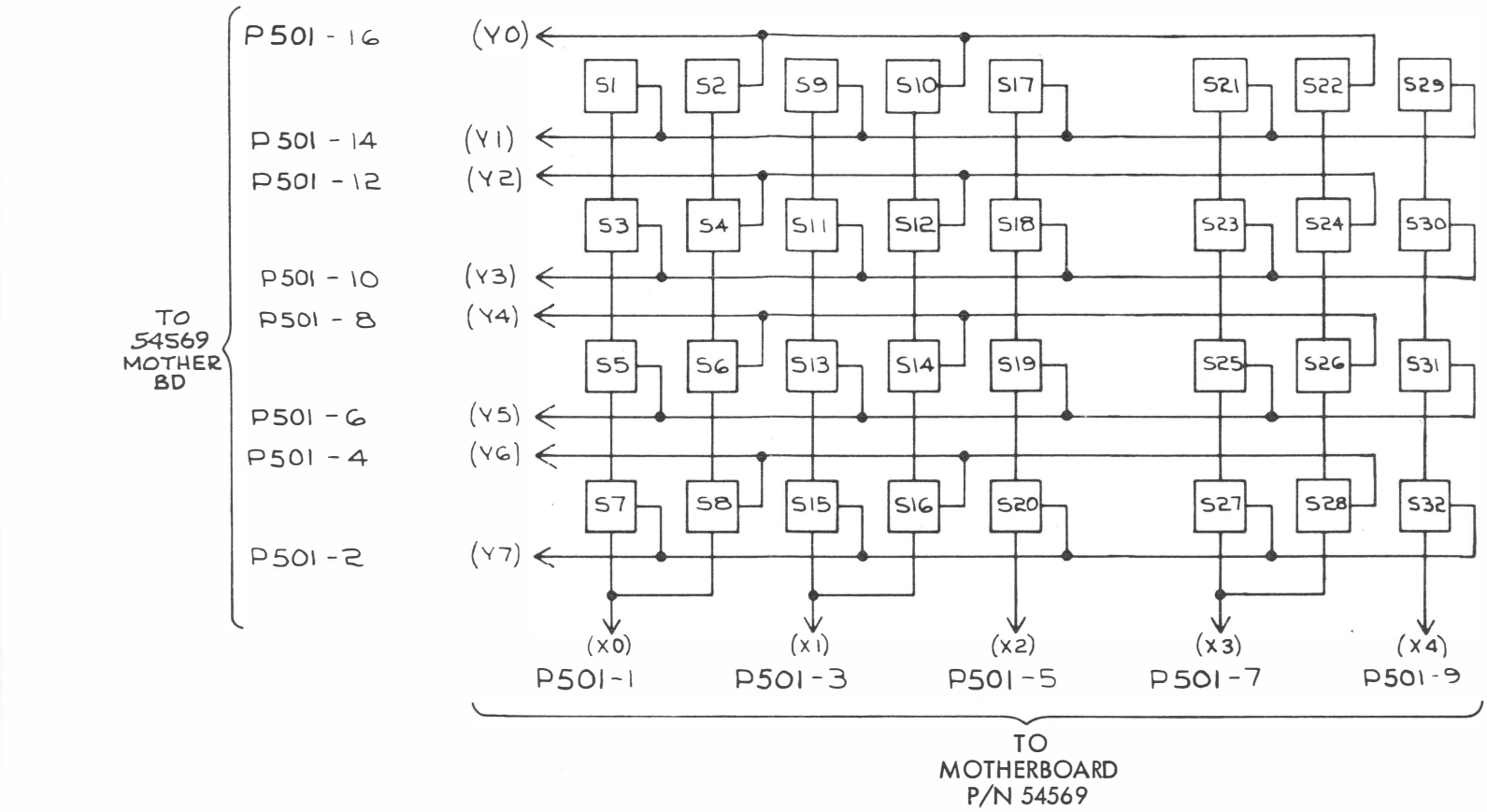

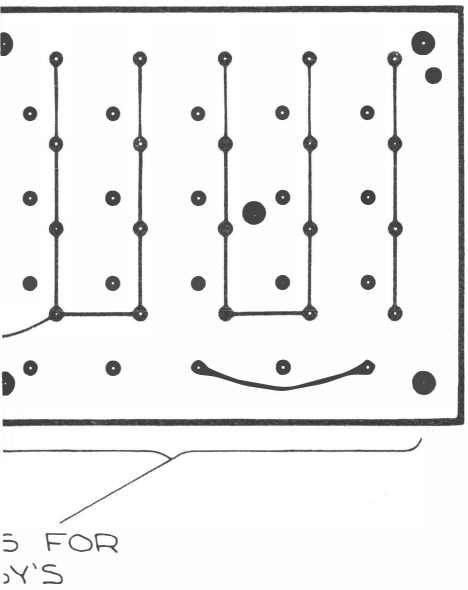

5 FOR
Y'S

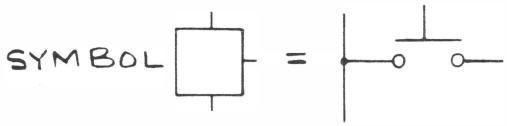

SWITCH DETAIL
S1 - S32

Figure 5-1. Keyboard Circuit Assembly (P/N 45573)

5.2.2 Keyboard-to-Motherboard Cable Assembly (P/N 47112)

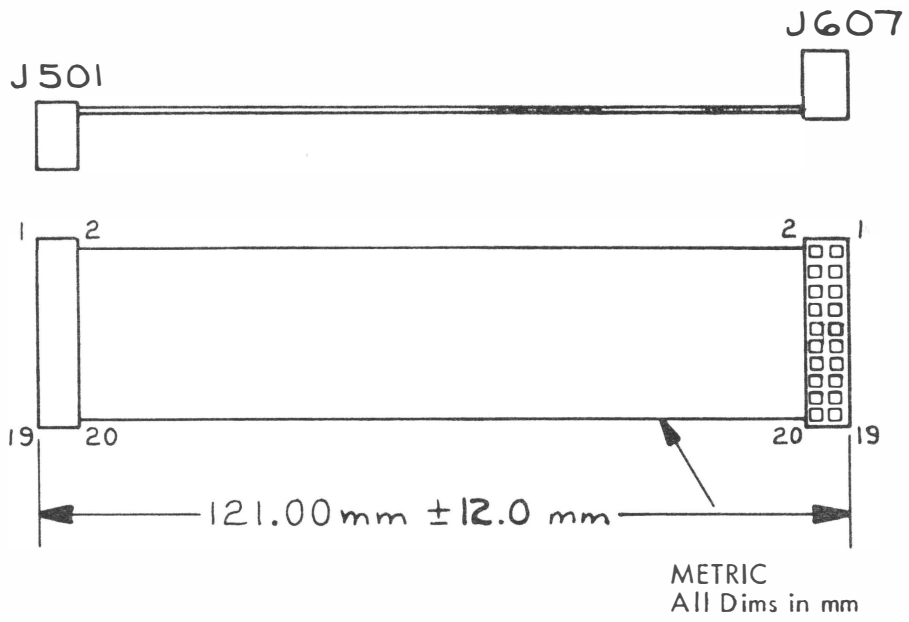

Figure 5-2. Keyboard-to-Motherboard Cable Assembly (P/N 47112)

5.3 MOTHERBOARD CIRCUIT ASSEMBLY (P/N 54569)

CIRCUIT NO.	DESCRIPTION	ESI PART NO.
	PCB, MOTHERBOARD	53871
C1,C44	CAPACITOR, 100 picofarad, 1000V, DISC	12241
C2,C5	CAPACITOR, 22 microfarad, 15V TANT	18852
C3,C4	CAPACITOR, 25 picofarad, DISC	01924
C7	CAPACITOR, 560 picofarad, POLY	25922
C8	CAPACITOR, 20 picofarad POLY	20926
C9-C40	CAPACITOR, 0.01 microfarad	45658
C41-C43, C45-C47	CAPACITOR, 1 microfarad, 50V	43852
CR1,CR2	DIODE, 1N4005	01779
CR6,CR7	DIODE, 1N914A	12356
DS1-DS5	LED, RED, 1/8 DIA	24009
J1-J7	CONNECTOR, PCB, 100 PIN	45661
J10	I/O HEADER, 20 PIN, RT ANGLE, 2 ROW	46501
Q1-Q4	TRANSISTOR, 2N3904	18751
R1,R10,R16, R19,R20,R39, R41,R45	RESISTOR, 1 kilohm, 1/4W, 10%	13920
R2,R4	RESISTOR, 68 ohm, 1/4W, 10%	13902
R3,R6,R5	RESISTOR, 220 ohm, 1/4W, 10%	13911
R7	RESISTOR, 100 ohm, 1/4W, 10%	13907
R9	RESISTOR, 4.7 kilohm, 1/4W, 10%	13927
R11-R15,R25, R42,R43,R36	RESISTOR, 47 ohm, 1/4W, 10%	13901
R17,R24	RESISTOR, 330 ohm, 1/4W, 10%	13913
R18,R21,R22	RESISTOR, 680 ohm, 1/4W, 10%	13917
R23	RESISTOR, 39 ohm, 1/4W, 10%	21219
R26,R28	RESISTOR, 820 ohm, 1/4W, 10%	13919
R27,R29,R8	RESISTOR, 560 ohm, 1/4W, 10%	13916
R30	RESISTOR, 10 kilohm, 1/4W, 1%	21740
R31	RESISTOR, 11.5 kilohm, 1/4W, 1%	21769
R32	RESISTOR, 470 kilohm, 1/4W, 10%	13955

5.3 MOTHERBOARD CIRCUIT ASSEMBLY (P/N 54569) (cont)

CIRCUIT NO.	DESCRIPTION	ESI PART NO.
R33,R35,R34	RESISTOR, 470 ohm, 1/4W, 10%	13915
R37	RESISTOR, 120 ohm, 1/4W, 10%	13908
R38	RESISTOR, 100 ohm, 1/4W, 1%	21720
R40	RESISTOR, 5.6 kilohm, 1/4W, 10%	13928
R47	RESISTOR, 10 ohm, 1/4W, 10%	13895
U1	IC, Z80 uP	46178
U2-U6	IC, EPROM SET	55088
U7,U8	IC, 2K x 8 RAM (Model 2150)	47264
U7,U8	IC, 8K x 8 RAM (Model 2160)	53874
U9	IC, 74LS139	45656
U10	IC, 7442	20608
U11,U16	IC, DM8131	45527
U12	IC, 8279	45651
U13	IC, MK3882, PROGRAM COUNTER TIMER	49183
U14	IC, FUSIBLE LINK PROM	53863
U15	IC, PAL14L4 (PRGM ARRAY LOGIC CHIP)	47321
U17,U35,U37	IC, 7404	20695
U18-U25	IC, DP8304B	45262
U26	IC, MC6847	45472
U28	IC, 7410	20603
U29,U46	IC, 7474	26225
U30,U39	IC, 74S373, OCTAL D LATCH	46201
U31	IC, 2K x 8 RAM (standard, Model 2150/2160)	47264
U31	IC, 2K x 8 ZRAM (optional, Model 2150/2160)	55843
U34	IC, 4N28, OPTO ISOLATOR	20674
U36	IC, 74LS163A	45647
U38	IC, LM311	29544
U40,U42	RESISTOR PAK, 10 kilohm, SIP	46560
U41	RESISTOR PAK, 330 ohm, SIP	46072
U44	IC, MC1403, 2.5V REF	43099
U45	IC, 7401	20601

5.3 MOTHERBOARD CIRCUIT ASSEMBLY (P/N 54569) (cont)

CIRCUIT NO.	DESCRIPTION	ESI PART NO.
W1-W4	WIRE, #18 BUS	06089
W5,W6	JUMPER, 3 INCH #22 YEL, 0.025 SQ SOCKET	48453
Y1	CRYSTAL, 3.58MHz	45663
Y2	CRYSTAL, 7.68MHz	45662
	BRACE, RH SIDE	46227
	BRACE, FRONT	46228
	BRACE, BACK	46229
	BUS STRIP	23997
	CABLE ASSEMBLY, MOTHERBOARD-TO-POWER SUPPLY	47111
	CABLE CLAMP	01703
	CABLE CLAMP	05269
	CONNECTOR STRIP, 36 PIN, 0.025 SQ	24012
	PIVOT, BRACKET	45163
	SOCKET, IC, 16 PIN	20860
	SOCKET, IC, 40 PIN	41342
	SOCKET, IC, 28 PIN	43844
	SOCKET, IC, 20 PIN	45660

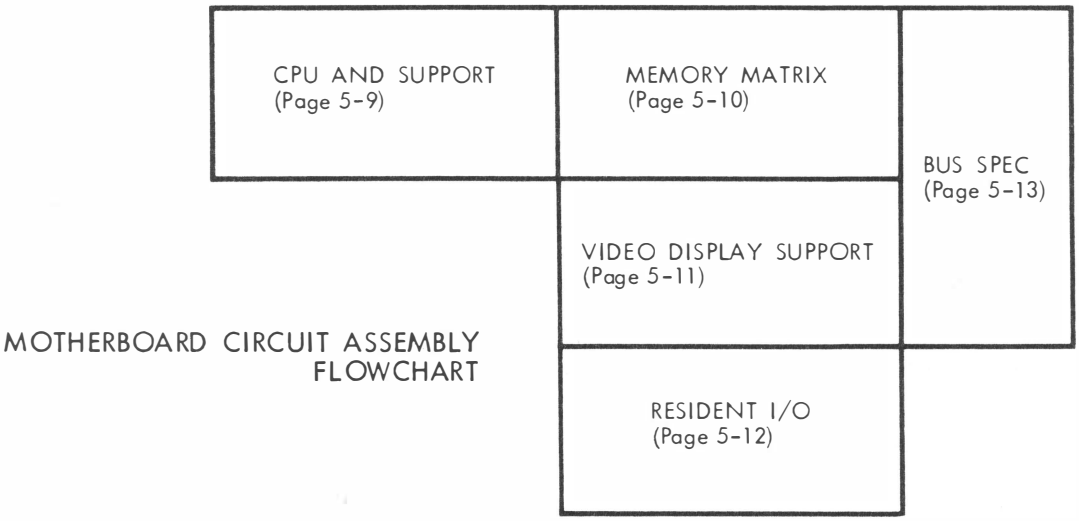

MOTHERBOARD CIRCUIT ASSEMBLY FLOWCHART

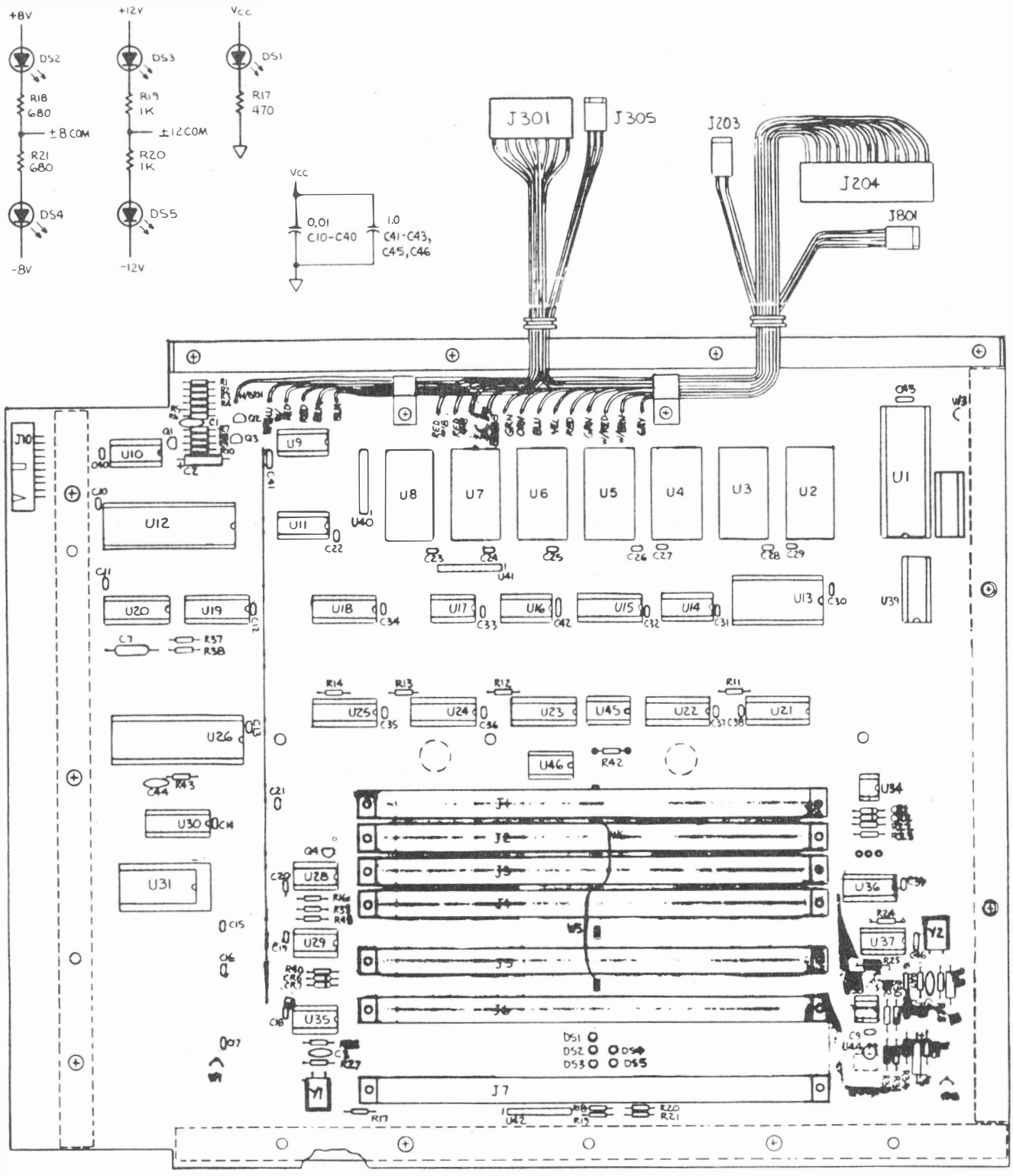

NOTE:

1. All Resistor Values are in Ohms, 1/4 W, 10%, Unless Otherwise Stated
2. All Capacitors are in µF Unless Otherwise Stated

Figure 5-3. Motherboard Circuit Assembly (P/N 54569)

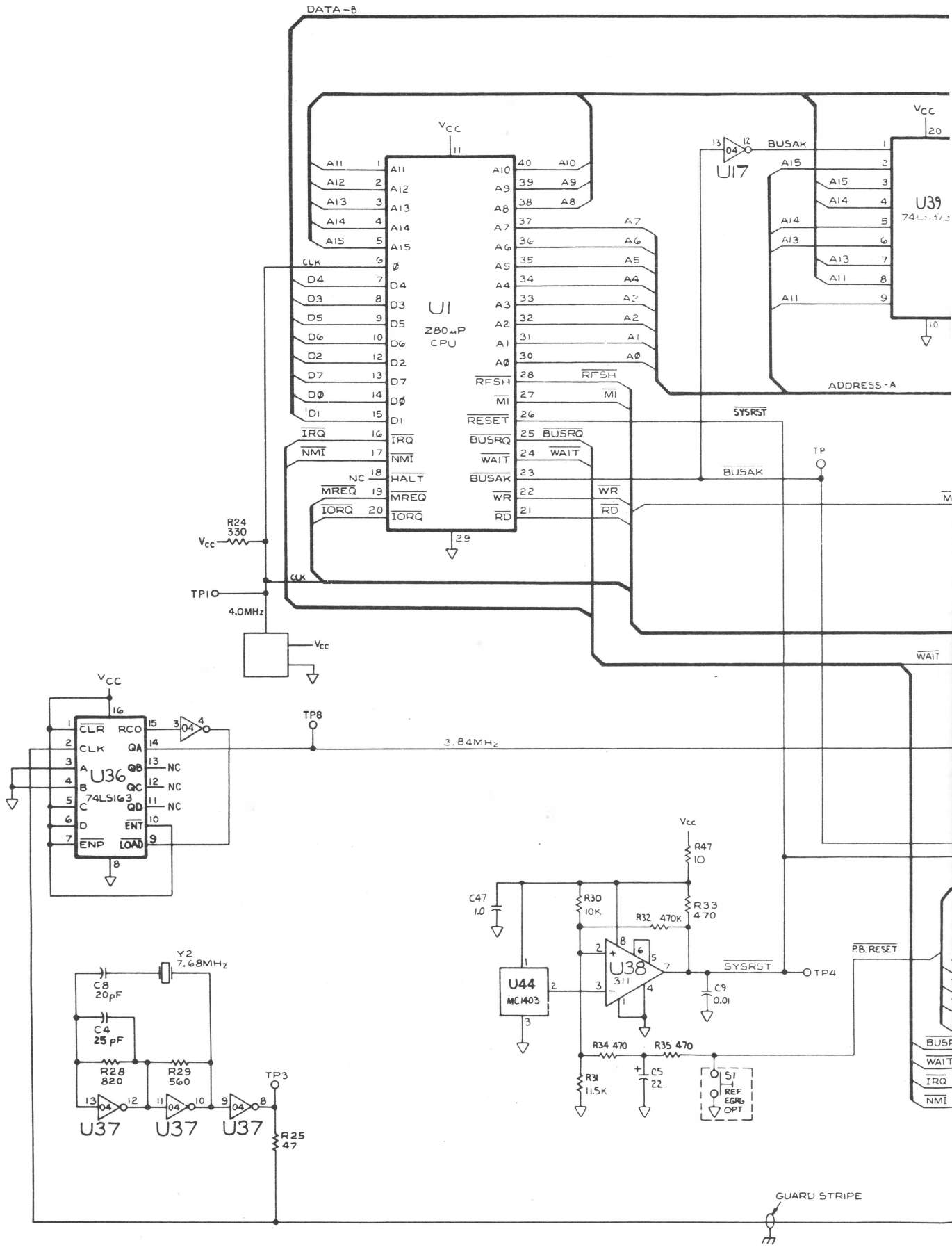
DATA-B
U1
Z80A CPU
U17
U39
ADDRESS-A
SYSRST
BUSAK
WAIT
TP
R24
330
Vcc
TP1
4.0MHz
CLK
TP8
3.84MHz
U36
74LS163
U37
U37
U37
Y2
7.68MHz
C8
20pF
C4
25 pF
R28
820
R29
560
TP3
R25
47
U38
311
U44
MC1403
R47
10
C47
1.0
R30
10K
R32 470K
R33
4.70K
C9
0.01
TP4
PB. RESET
R34 470
R35 470
R31
11.5K
C5
22
S1
REF
EGRG
OPT
GUARD STRIPE

CPU & SUPPORT

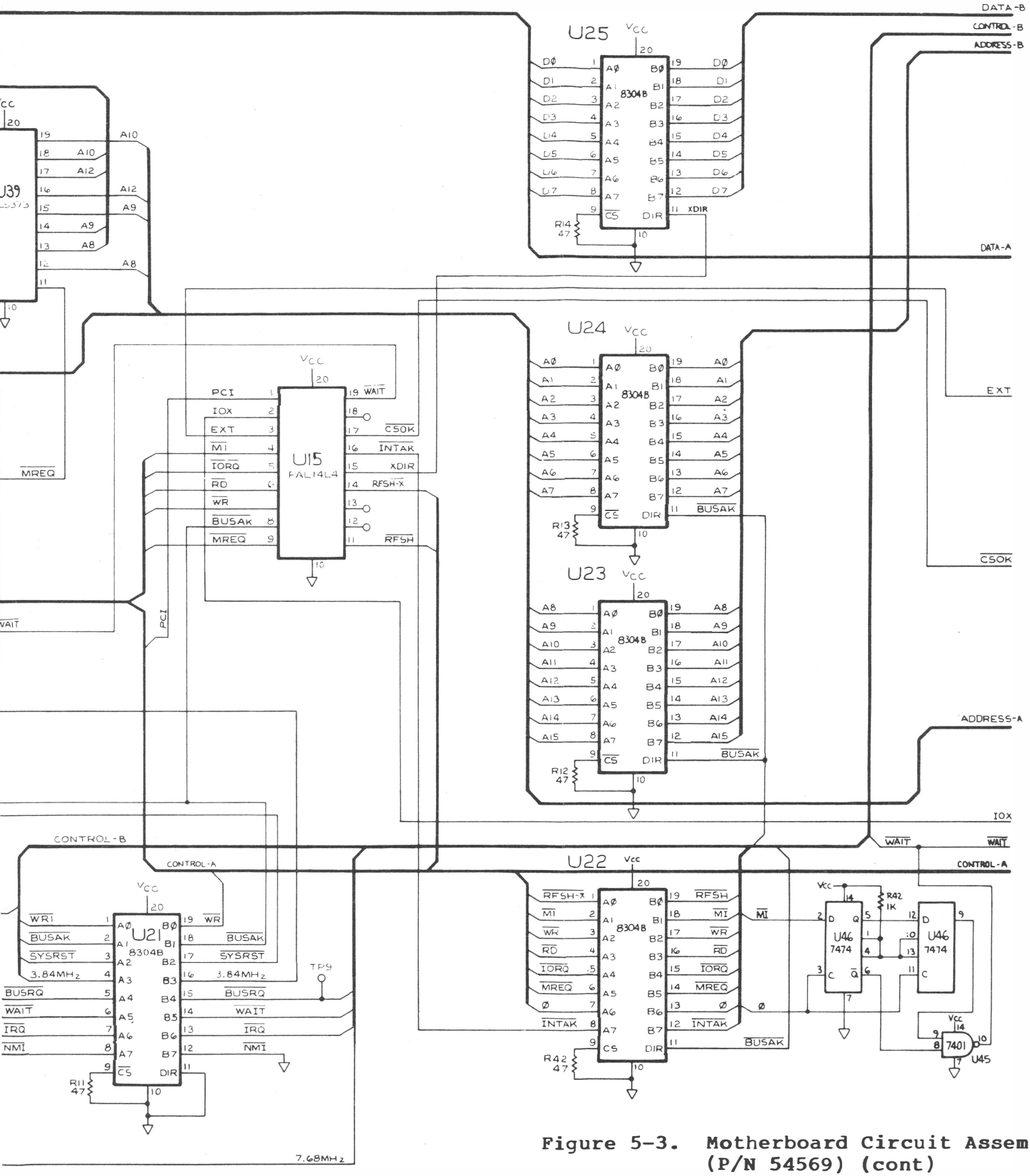

Figure 5-3. Motherboard Circuit Assembly (P/N 54569) (cont)

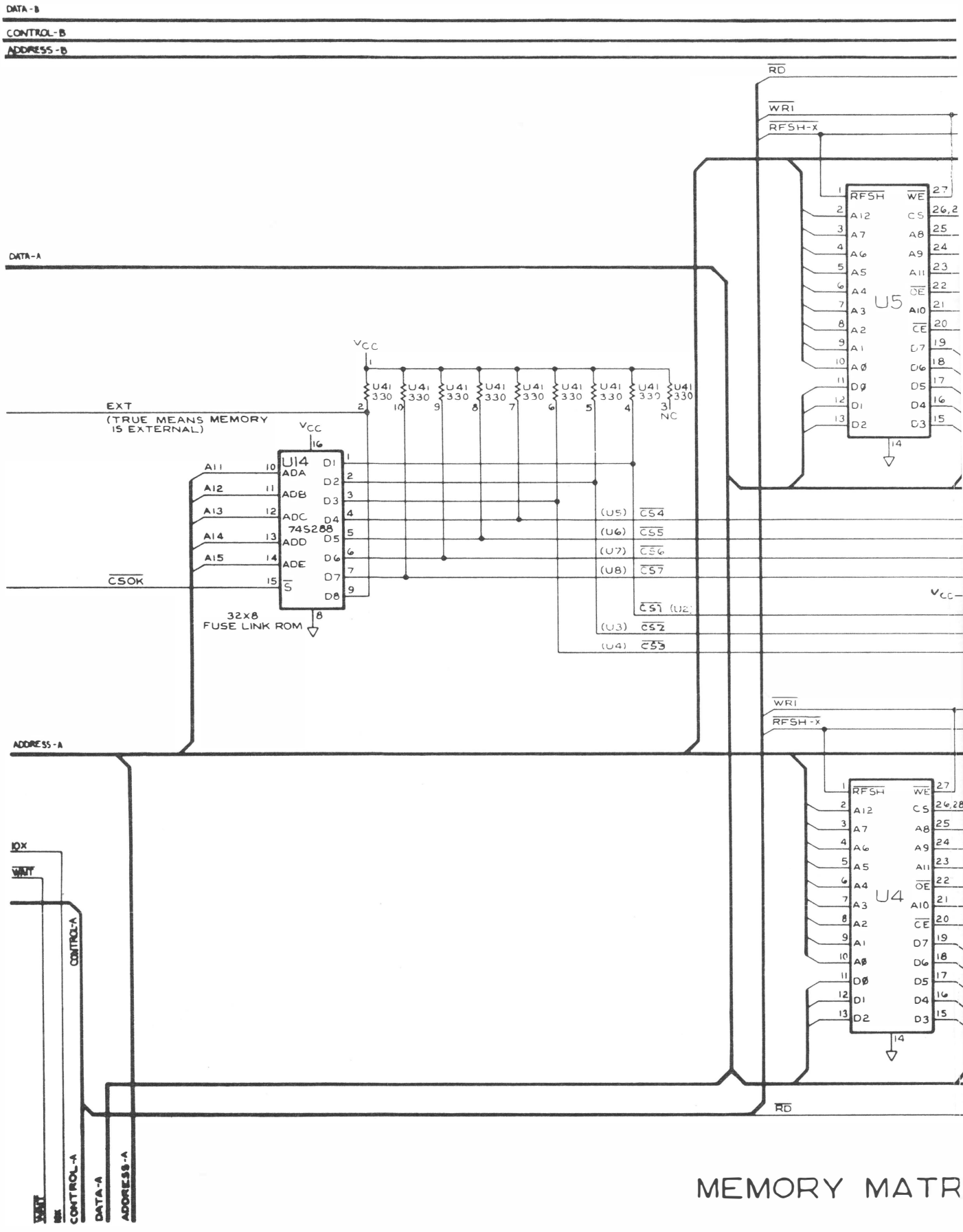
DATA-B
CONTROL-B
ADDRESS-B
RD
WRI
RFSH-X
DATA-A
U5
RFSH
WE
A12
CS
A7
A8
A6
A9
A5
A11
A4
OE
A3
A10
A2
CE
A1
D7
A0
D6
D0
D5
D1
D4
D2
D3
VCC
U41 330
EXT
(TRUE MEANS MEMORY IS EXTERNAL)
NC
U14
ADA
ADB
ADC
ADD
ADE
74S288
32X8
FUSE LINK ROM
A11
A12
A13
A14
A15
CSOK
D1
D2
D3
D4
D5
D6
D7
D8
(U5) CS4
(U6) CS5
(U7) CS6
(U8) CS7
CS1 (U2)
(U3) CS2
(U4) CS3
ADDRESS-A
U4
IOX
WAIT
CONTROL-A
DATA-A
ADDRESS-A

MEMORY MATR

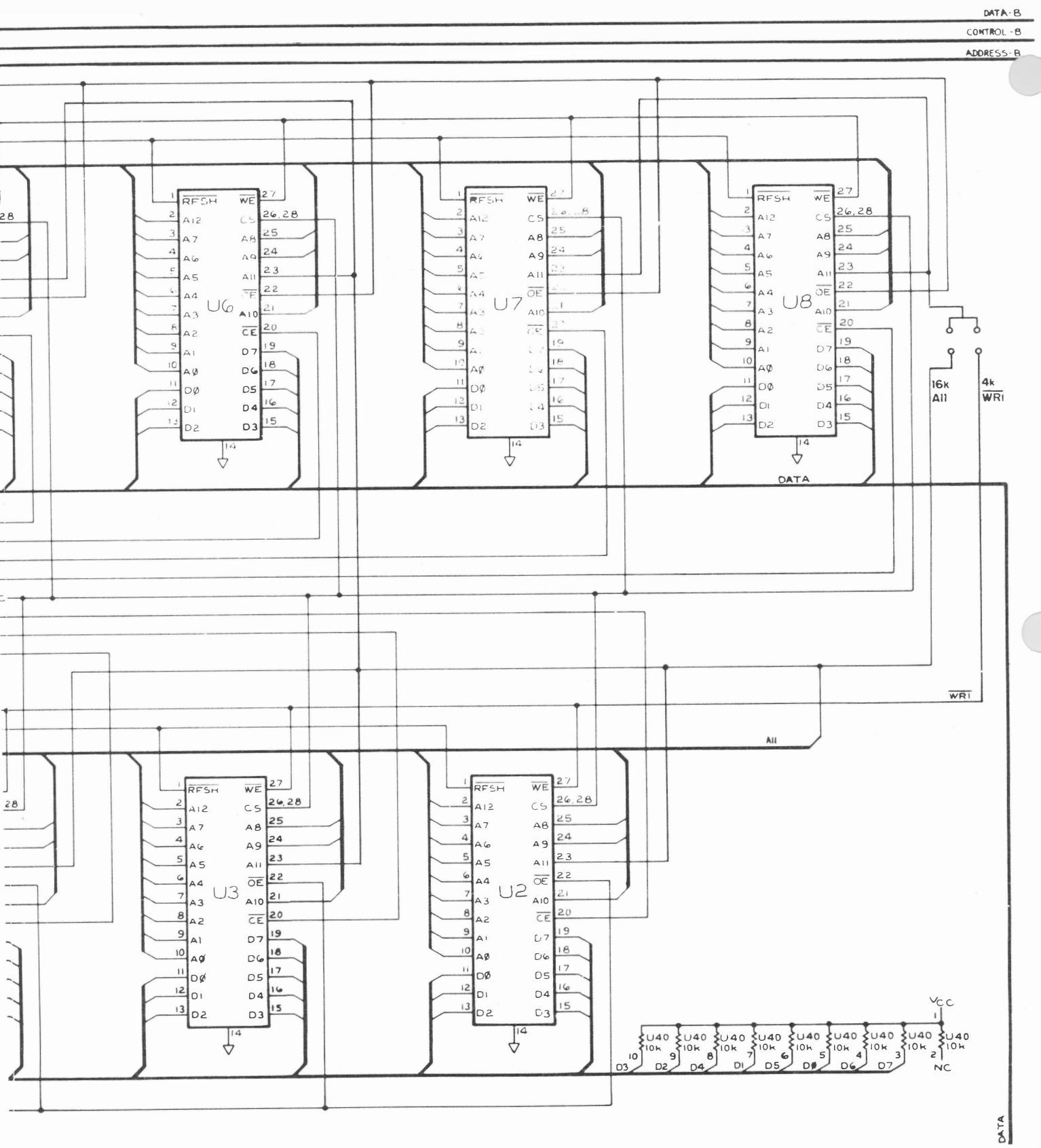

Figure 5-3. Motherboard Circuit Assembly (P/N 54569) (cont)

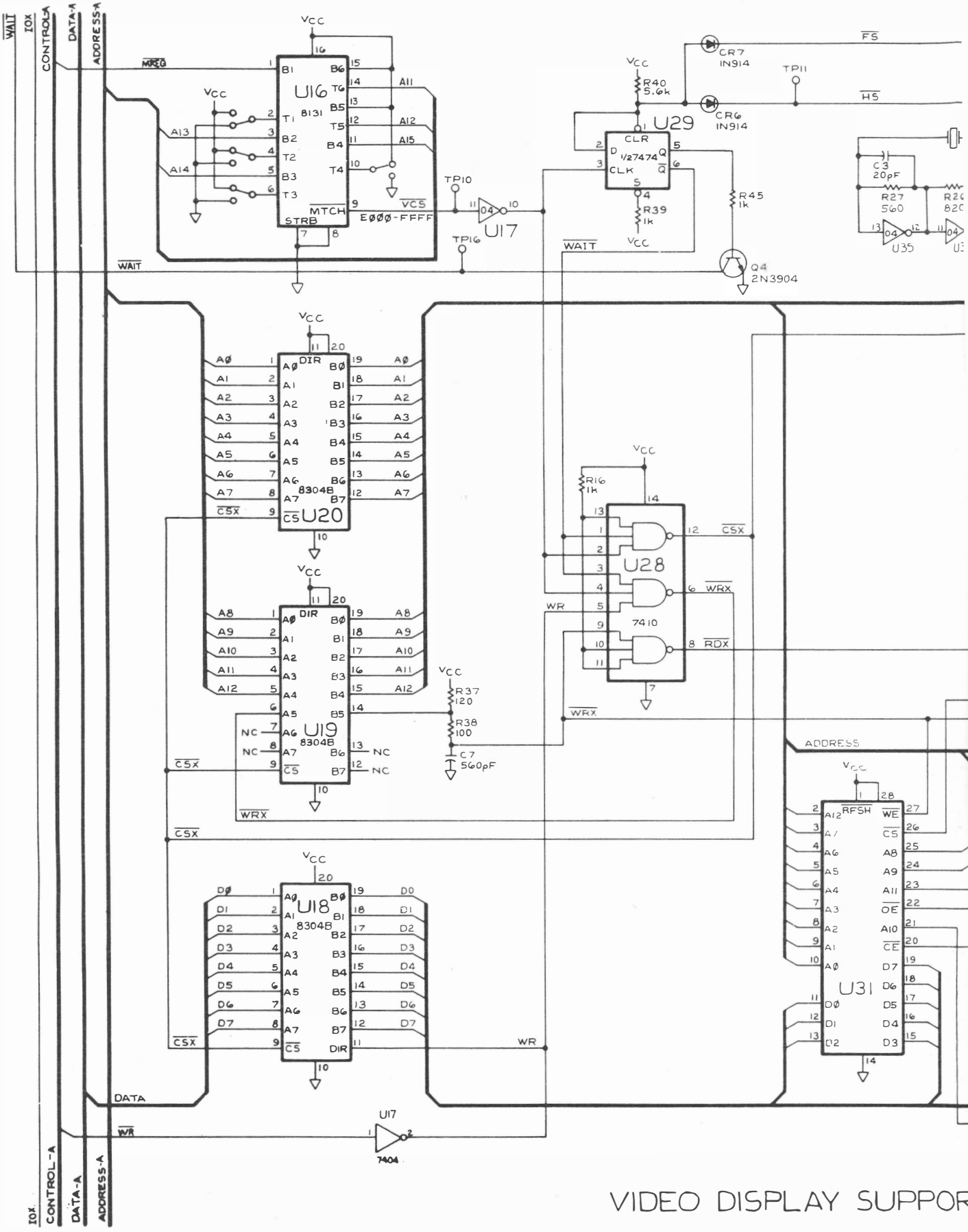

VIDEO DISPLAY SUPPOR

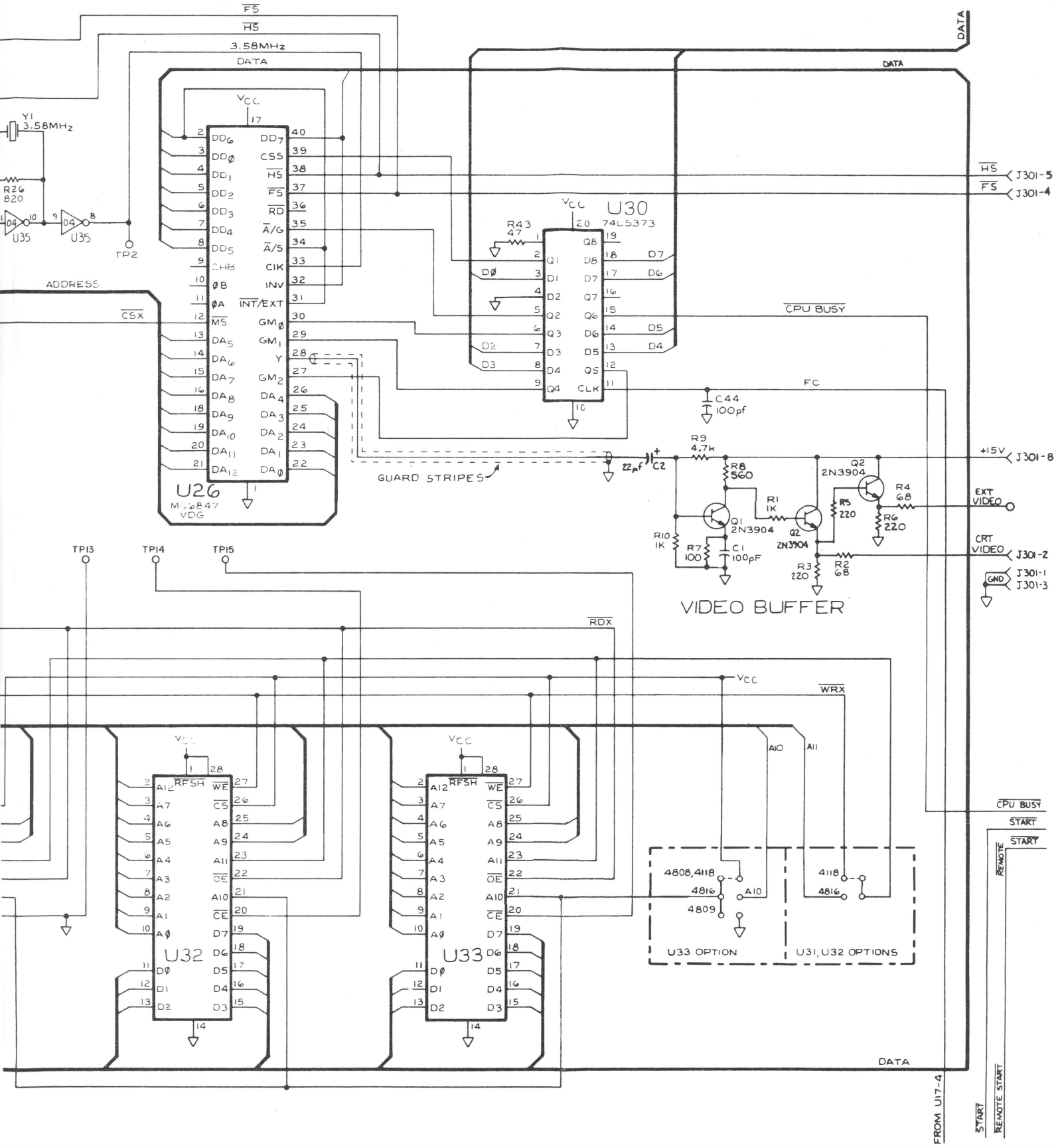

Figure 5-3. Motherboard Circuit Assembly (P/N 54569) (cont)

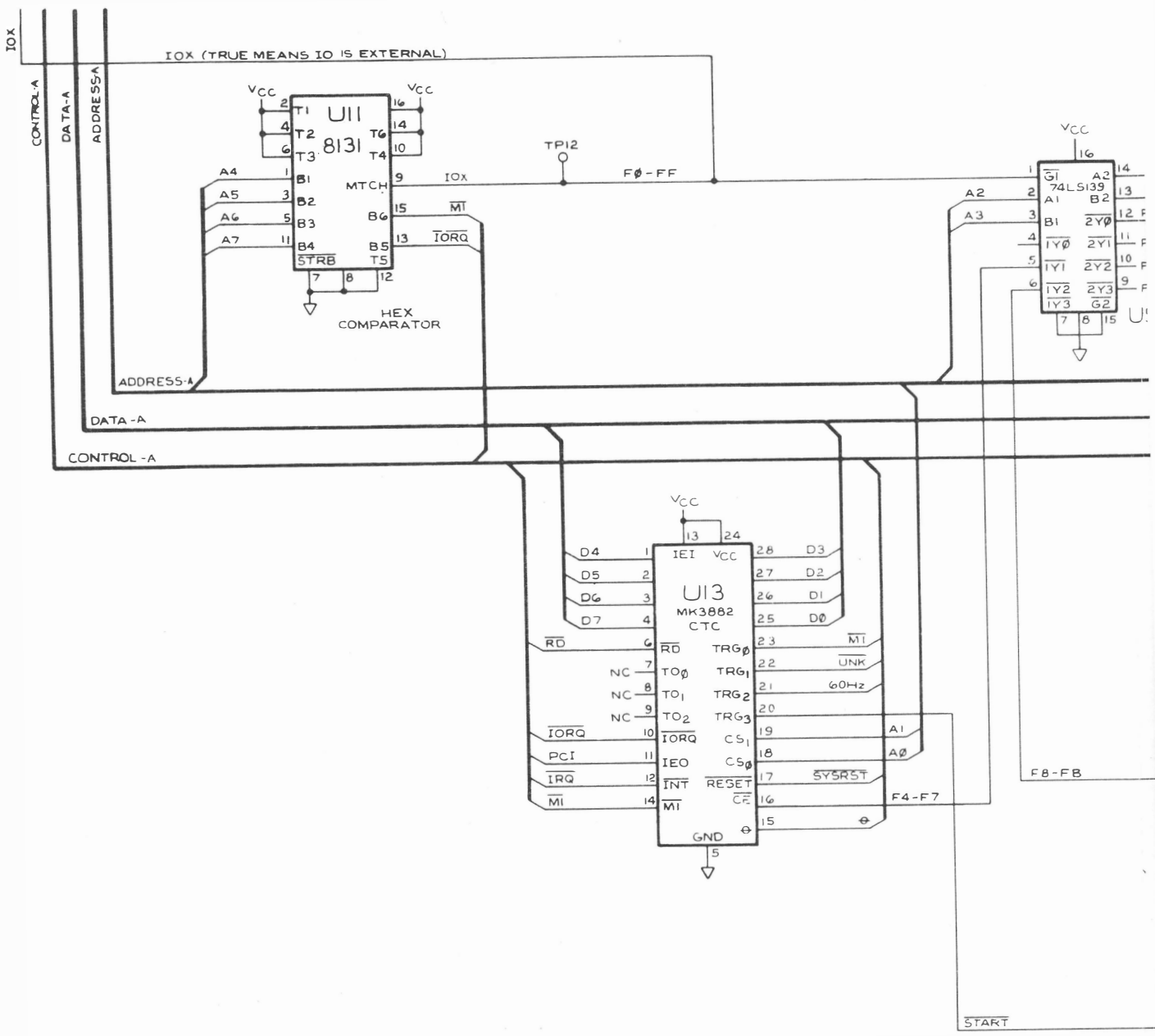
IOX
CONTROL-A
DATA-A
ADDRESS-A
IOX (TRUE MEANS IO IS EXTERNAL)
U11
8131
HEX
COMPARATOR
TP12
F0-FF
74LS139
U13
MK3882
CTC
ADDRESS-A
DATA-A
CONTROL-A
F8-FB
F4-F7
START

RESIDENT I/O

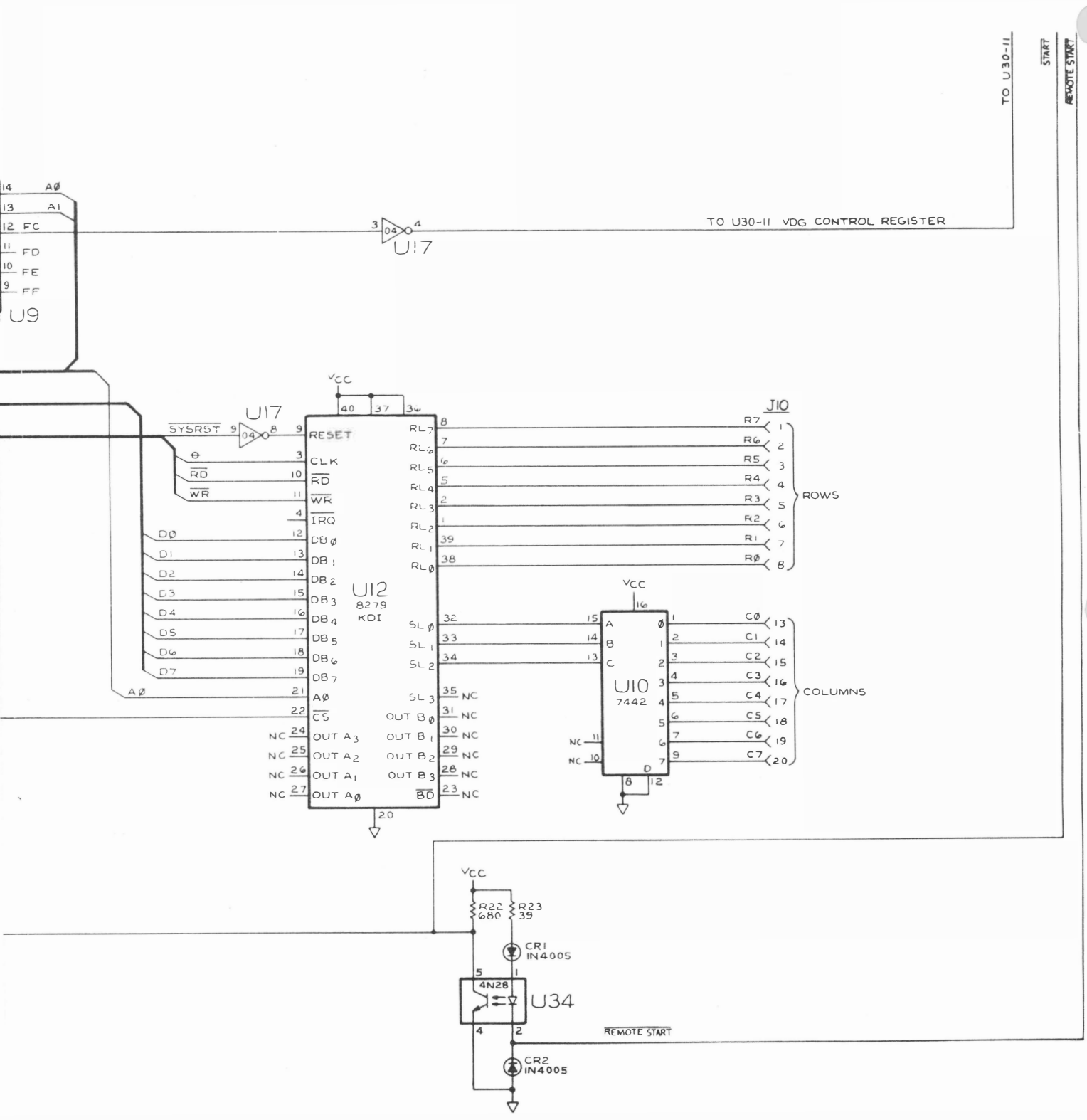

Figure 5-3. Motherboard Circuit Assembly (P/N 54569) (cont)

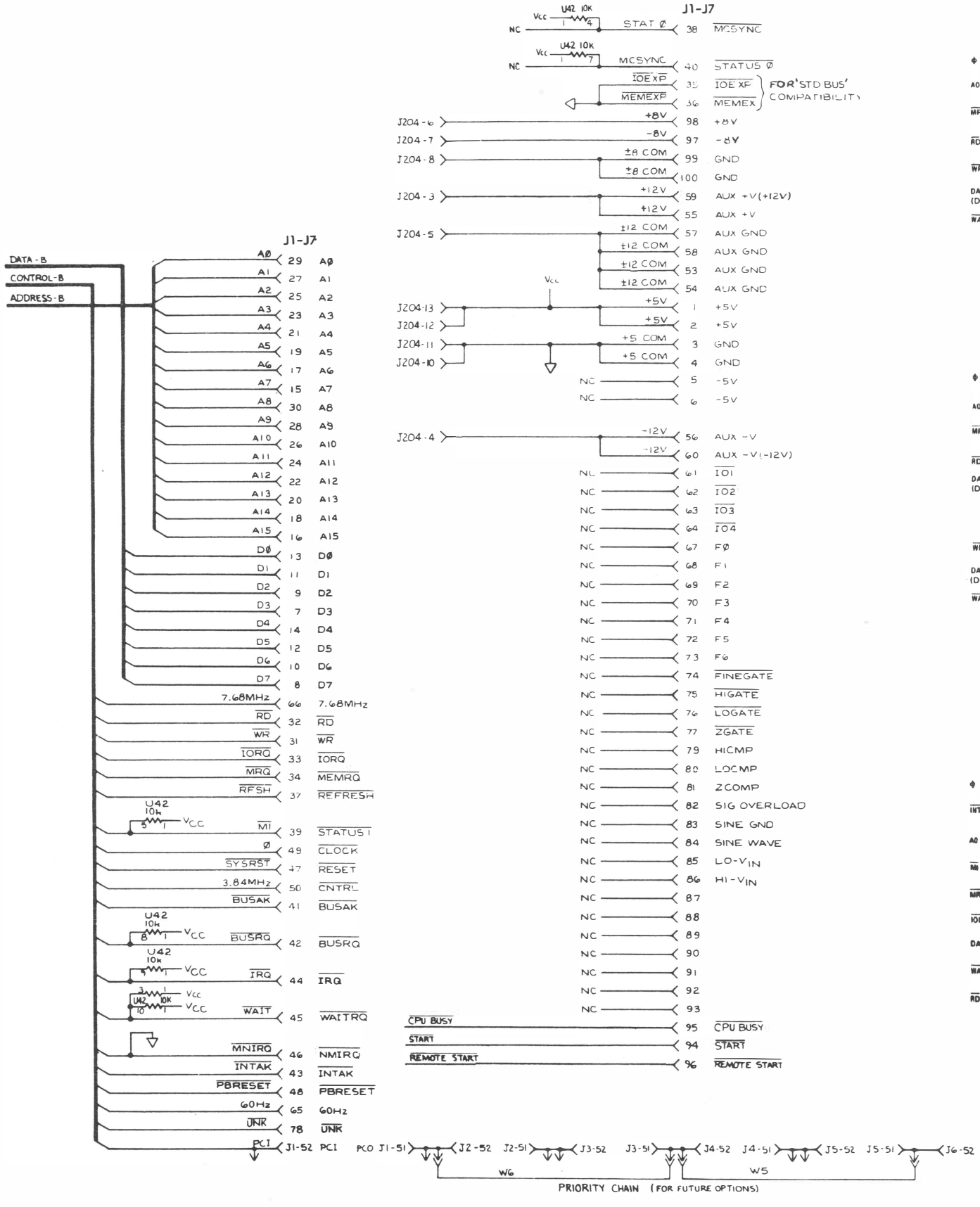
J1-J7
DATA-B
CONTROL-B
ADDRESS-B
A0 29 A0
A1 27 A1
A2 25 A2
A3 23 A3
A4 21 A4
A5 19 A5
A6 17 A6
A7 15 A7
A8 30 A8
A9 28 A9
A10 26 A10
A11 24 A11
A12 22 A12
A13 20 A13
A14 18 A14
A15 16 A15
D0 13 D0
D1 11 D1
D2 9 D2
D3 7 D3
D4 14 D4
D5 12 D5
D6 10 D6
D7 8 D7
7.68MHz 66 7.68MHz
RD 32 RD
WR 31 WR
IORQ 33 IORQ
MRQ 34 MEMRQ
RFSH 37 REFRESH
U42 10K
M1 39 STATUS1
0 49 CLOCK
SYSRST 47 RESET
3.84MHz 50 CNTRL
BUSAK 41 BUSAK
U42 10K
BUSRQ 42 BUSRQ
U42 10K
IRQ 44 IRQ
U42 10K
WAIT 45 WAITRQ
MNIRQ 46 NMIRQ
INTAK 43 INTAK
PBRESET 48 PBRESET
60Hz 65 60Hz
UNK 78 UNK
PCI J1-52 PCI
J1-J7
U42 10K
NC STAT 0 38 MCSYNC
U42 10K
NC MCSYNC 40 STATUS 0
IOEXP 35 IOEXP
MEMEXP 36 MEMEX
FOR 'STD BUS' COMPATIBILITY
J204-6 +8V 98 +8V
J204-7 -8V 97 -8V
J204-8 ±8 COM 99 GND
±8 COM 100 GND
J204-3 +12V 59 AUX +V(+12V)
+12V 55 AUX +V
J204-5 ±12 COM 57 AUX GND
±12 COM 58 AUX GND
±12 COM 53 AUX GND
±12 COM 54 AUX GND
Vcc
J204-13 +5V 1 +5V
J204-12 +5V 2 +5V
J204-11 +5 COM 3 GND
J204-10 +5 COM 4 GND
NC 5 -5V
NC 6 -5V
J204-4 -12V 56 AUX -V
-12V 60 AUX -V(-12V)
NC 61 IO1
NC 62 IO2
NC 63 IO3
NC 64 IO4
NC 67 F0
NC 68 F1
NC 69 F2
NC 70 F3
NC 71 F4
NC 72 F5
NC 73 F6
NC 74 FINEGATE
NC 75 HIGATE
NC 76 LOGATE
NC 77 ZGATE
NC 79 HICMP
NC 80 LOCMP
NC 81 ZCOMP
NC 82 SIG OVERLOAD
NC 83 SINE GND
NC 84 SINE WAVE
NC 85 LO-VIN
NC 86 HI-VIN
NC 87
NC 88
NC 89
NC 90
NC 91
NC 92
NC 93
CPU BUSY 95 CPU BUSY
START 94 START
REMOTE START 96 REMOTE START
PCI J1-51 J2-52 J2-51 J3-52 J3-51 J4-52 J4-51 J5-52 J5-51 J6-52
W6
W5
PRIORITY CHAIN (FOR FUTURE OPTIONS)

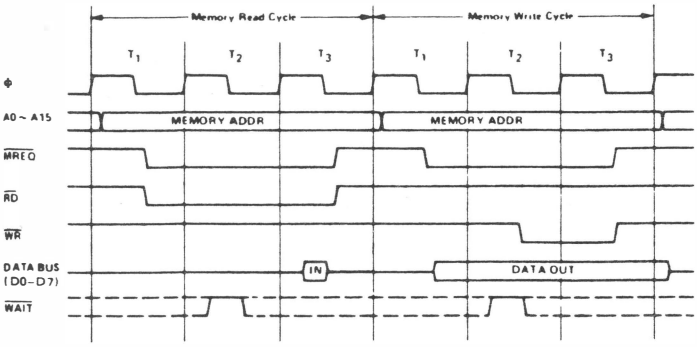

MEMORY READ OR WRITE CYCLES

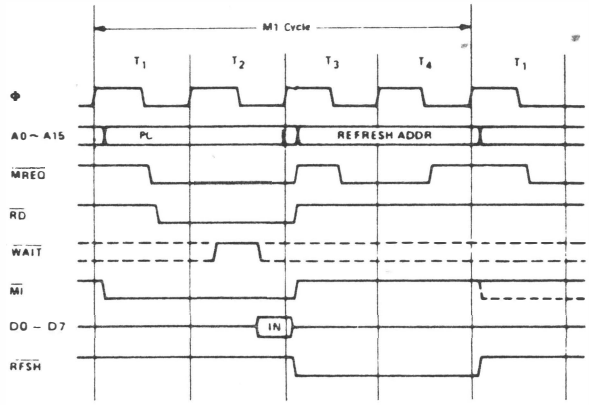

INSTRUCTION OP CODE FETCH

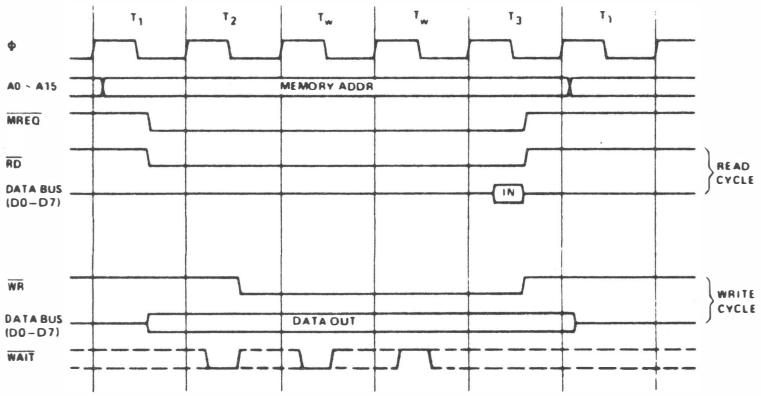

MEMORY READ OR WRITE CYCLES WITH WAIT STATES

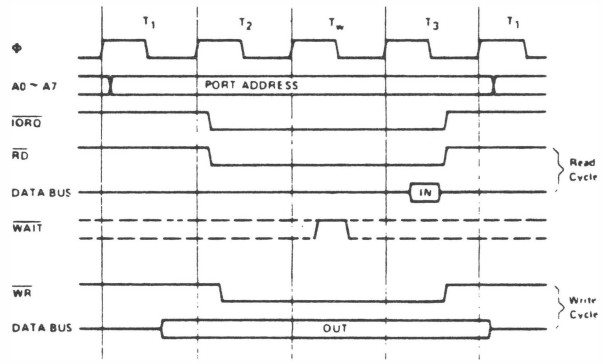

INPUT OR OUTPUT CYCLES

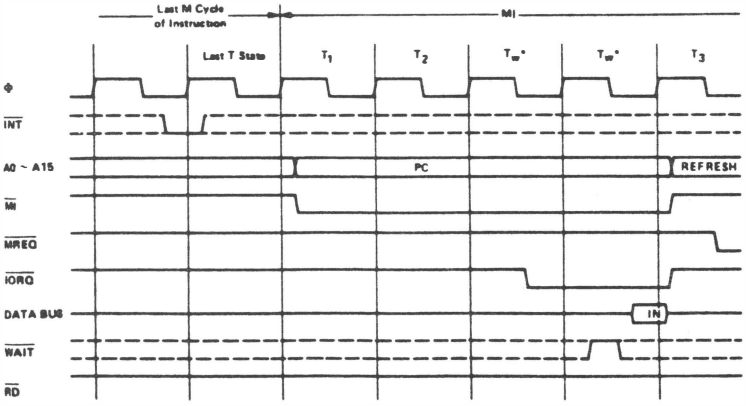

INTERRUPT REQUEST/ACKNOWLEDGE CYCLE

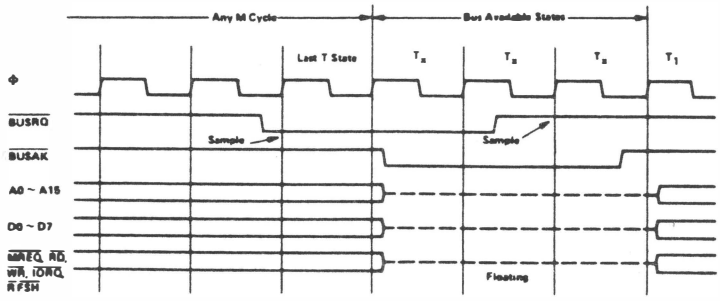

BUS REQUEST/ACKNOWLEDGE CYCLE

J6-52

Figure 5-3. Motherboard Circuit Assembly (P/N 54569) (cont)

5.3.1 Motherboard Cable Assembly (P/N 49302)

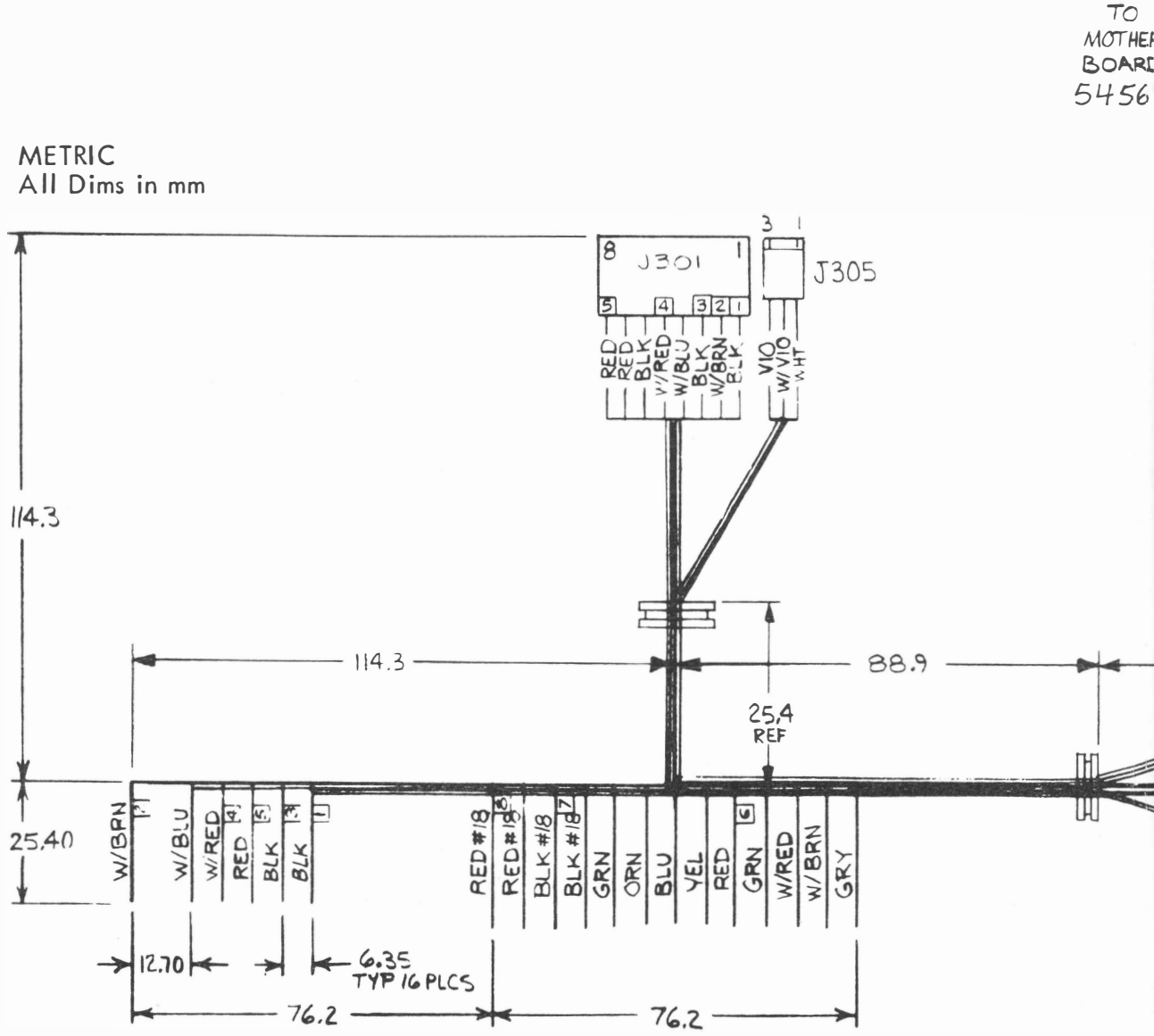

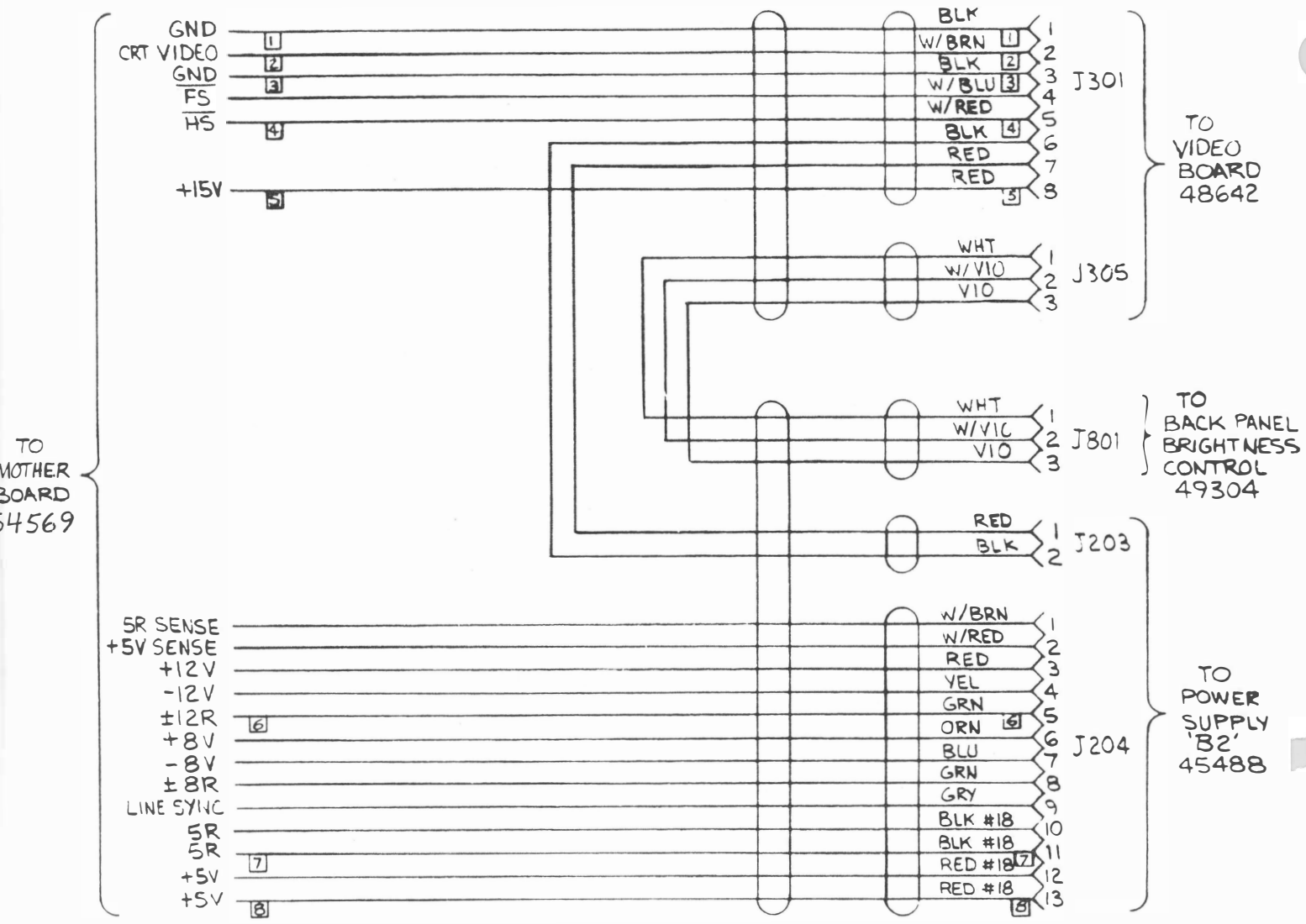

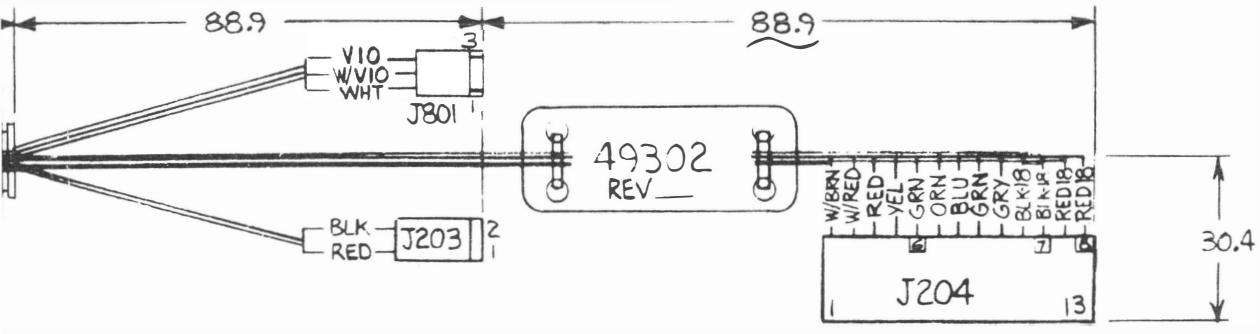

Figure 5-4. Motherboard Cable Assembly (Part No. 49302)

5.4 ANALOG CIRCUIT ASSEMBLY (P/N 53675)

CIRCUIT NO.	DESCRIPTION	ESI PART NO.
	PC BOARD, ANALOG	53674
	PANEL, CONNECTOR	45162
	SWING LUG, BINDING POST	03247
	BRACKET, CONNECTOR PANEL	45161
	HEAT SINK, 14-16 PIN DIP	54740
	BUS, POWER STRIP	23997
	SOCKETS, 14 PIN DIP	19189
	SOCKETS, 16 PIN DIP	20860
	SOCKETS, 8 PIN DIP	52188
	SOCKETS, 8 PIN DIP	22410
	SOCKETS, 10 PIN DIP	46481
	SOCKET, 20 PIN DIP	45660
	CONNECTOR, BNC ISOLATED	41820
	FUSE CARRIER, GRAY 3AG	45966
	POST, FUSE BODY, HI PROFILE	45968
	JACK 1/8" PHONO	47082
	PLUG, MALE PIN PHONO	47083
	POST, BINDING	01435
	FUSE CARRIER ALT METRIC 5 x 20 BLK	45965
	INSULATOR, TRANSFORMER MTG	47275
C1,C3,C5,C6, C12,C13,C15, C16,C21,C22, C24-C28,C30, C31,C34,C35, C36,C43,C56	CAPACITOR, 0.1 microfarad, 50V, DIP	51268
C2,C8,C20	CAPACITOR, 30 picofarads, POLY	20242
C4,C14,C23, C29	CAPACITOR, 0.47 microfarad, 100V	45645

5.4 ANALOG CIRCUIT ASSEMBLY (cont)

CIRCUIT NO.	DESCRIPTION	ESI PART NO.
C7	CAPACITOR, 100 picofarad, POLY	18760
C9,C10,C19	CAPACITOR, 220 picofarad, POLY	29297
C11,C39	CAPACITOR, 470 picofarad, POLY	44711
C17	CAPACITOR, 0.022 microfarad, 200V, MYLAR	48665
C18	CAPACITOR, 0.0022 microfarad,	12399
C37,C38	CAPACITOR, 390 picofarad, POLY	29299
C40,C41	CAPACITOR, 0.01 microfarad, 50V CERAMIC	78032
C44,C48	CAPACITOR, 8.2 picofarad, DISC	02127
C45	CAPACITOR, 25 microfarad, 25V ELECTROLYTIC	01941
C46,C47	CAPACITOR, 6.8 microfarad, TANT 35V	43792
C50,C51	CAPACITOR, 0.047 microfarad, 63VDC, FILM	54696
C52,C53	CAPACITOR, 0.0022 microfarad, 100VDC, FILM	54697
C54,C55	CAPACITOR, 0.0047 microfarad, 100VDC, MYLAR	54694
C57	CAPACITOR, 150 picofarad, POLY	29606
C58	CAPACITOR, 500 picofarad, CERAMIC, 1000V	01920
C59	CAPACITOR, 47 picofarad,	29605
C60,C61	CAPACITOR, 0.047 microfarad, 63VDC, FILM	54695
C62	CAPACITOR, 10 microfarad, 20V, TANT	43856
C63	CAPACITOR, 15 picofarad, 1kV, 5%	56191
	CAPACITOR, 0.02 microfarad, 100V, 20%	12115
CR1,CR2,CR5, CR6,CR7,CR9, CR10	DIODE, 1N4005, 500V PIV	13654
CR12,CR13, CR16-CR19, CR24,CR25, CR30-CR35	DIODE, 1N914A, 75V PIV	12356
CR22	SURGE ARRESTOR, GAS	55494
CR23	VARISTOR, 10V LIMIT	42632
CR26,CR27	DIODE, IN5355A, ZENER, 18V, 5 OWT	29033
	DIODE, 1N4937 600V PIV	45856
F2	FUSE, 0.5A, 250V, 3AG, FAST-BLOW	01802

5.4 ANALOG CIRCUIT ASSEMBLY (cont)

CIRCUIT NO.	DESCRIPTION	ESI PART NO.
K1,K4,K6	RELAY, FORM 1A, 5V, SIP	53599
K2,K5	RELAY, GB 822	26667
K3	RELAY, 1805 B-300 ELECTRODYNE	46286
Q1,Q2	XSTR, PNP/NPN ARRAY (WITH HEAT SINK)	55067
R1	RESISTOR, 8.2 kilohm, 1/2W, 5%	06181
R2	RESISTOR, 22 kilohm, 1/2W, 10%	02453
R3	RESISTOR, 820 ohm, 1W, 10%	26836
R4	RESISTOR, 47 ohm, 1W, 10%	53593
R5,R6	RESISTOR, 100 kilohm, 1/4W, 10%	13945
R7	RESISTOR, 18 ohm, 1W, 5%	55845
R8	RESISTOR, 90 kilohm, 0.01%	53953
R9	RESISTOR, 10 ohm, ESI QB, 0.005%	53952
R10	RESISTOR, 90 ohm, ESI QB, 0.005%	53954
R11	RESISTOR, 900 ohm, ESI QB, 0.005%	53956
R12	RESISTOR, 9 kilohm, ESI QB, 0.005%	53955
R13,R18,R25, R33-R35,R41	RESISTOR, 10 kilohm, 1/4W, 10%	13933
R14,R16,R24, R36	RESISTOR, 2 megohm, 1%	21772
R15	RESISTOR, 500 kilohm, VARIABLE, 20T	54104
R17	RESISTOR, 15 megohm, 10%	13976
R19-R23	RESISTOR, 2 kilohm, VARIABLE, 1/4W	46388
R26	RESISTOR, 2.55 ohm, 1/4W, 1%	21761
R27	RESISTOR, 1 kilohm, 1/4W, 1%	21730
R30,R42,R43	RESISTOR, 10 kilohm, 1%	21740
R31	RESISTOR, 9.53 kilohm, 1/4W, 1%	21762
R32,R49,R51, R60-R63	RESISTOR, 2.2 kilohm, 1/4W, 10%	13924

5.4 ANALOG CIRCUIT ASSEMBLY (cont)

CIRCUIT NO.	DESCRIPTION	ESI PART NO.
R37-R40	RESISTOR, 2.7 ohm, 1/4W, 10%	13887
R44	RESISTOR, 4.99 kilohm, 1/4W, 1%	21737
R45,R46	RESISTOR, 10 kilohm, VARIABLE	46204
R47	RESISTOR, 150 ohm, 1/4W, 10%	13909
R48,R52,R53 R58	RESISTOR, 1 kilohm, 1/4W, 10%	13920
R54,R55	RESISTOR, 10 kilohm, VARIABLE, 20T	41902
R56,R57	RESISTOR, 10 ohm, 1/4W, 10%	13895
R65,R66	RESISTOR, 100 ohm, 1/4W, 10%	13907
R68	RESISTOR, 2.7 kilohm, 1/4W, 10%	13925
T1	TRANSFORMER	46480
TP1-TP8	TERMINAL, TURRET	52073
U1,U19	IC, HA5115	53895
U2,U3,U6,U8	IC, LF356N	41473
U4,U10,U20	IC, 4052AE	20743
U5	IC, CD4051	40841
U7	IC, LM311	29544
U11,U13	IC, TL074	43299
U12	IC, 74S472, PROGRAMMED	53960
U14,U17	IC, AD7524JN DAC	45652
U15	IC, DIP RESISTORS R698-3-R10K	43077
U16	IC, SIP RESISTORS	47328
U18,U21	IC, 7475N	20614
U22	IC, AD7548 DAC	54174
U23	IC, 7406	20678
U24	IC, 74LS373	46201

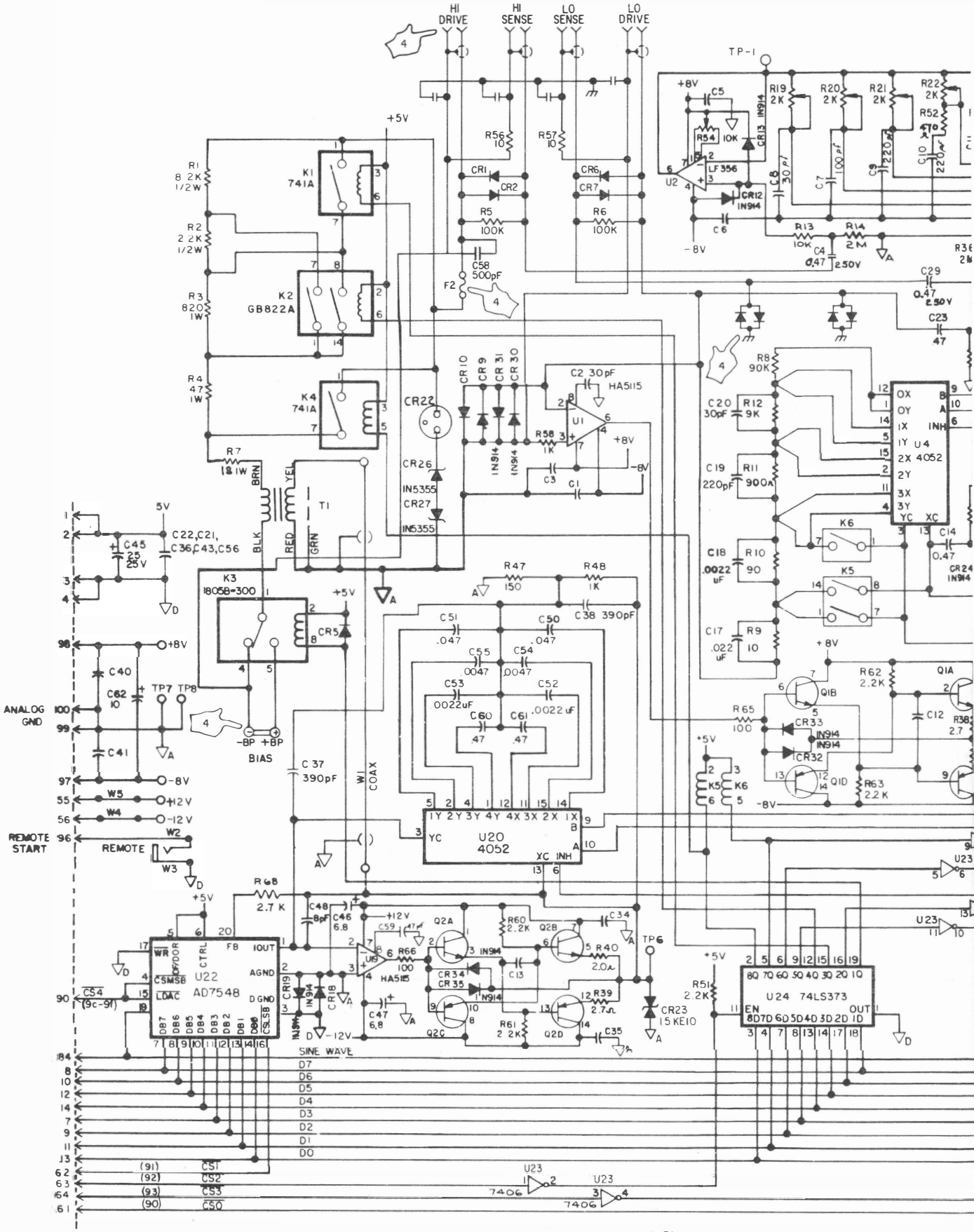

NOTES; UNLESS OTHERWISE SPECIFIED:

1. ALL RESISTOR VALUES ARE IN OHMS, 1/4 W, 10%.
2. ALL CAPACITORS ARE IN μF , UNLISTED VALUES ARE
3. ALL DIODES ARE IN4005.

4 COMPONENTS NOTED ARE MOUNTED ON THE REAR PANE

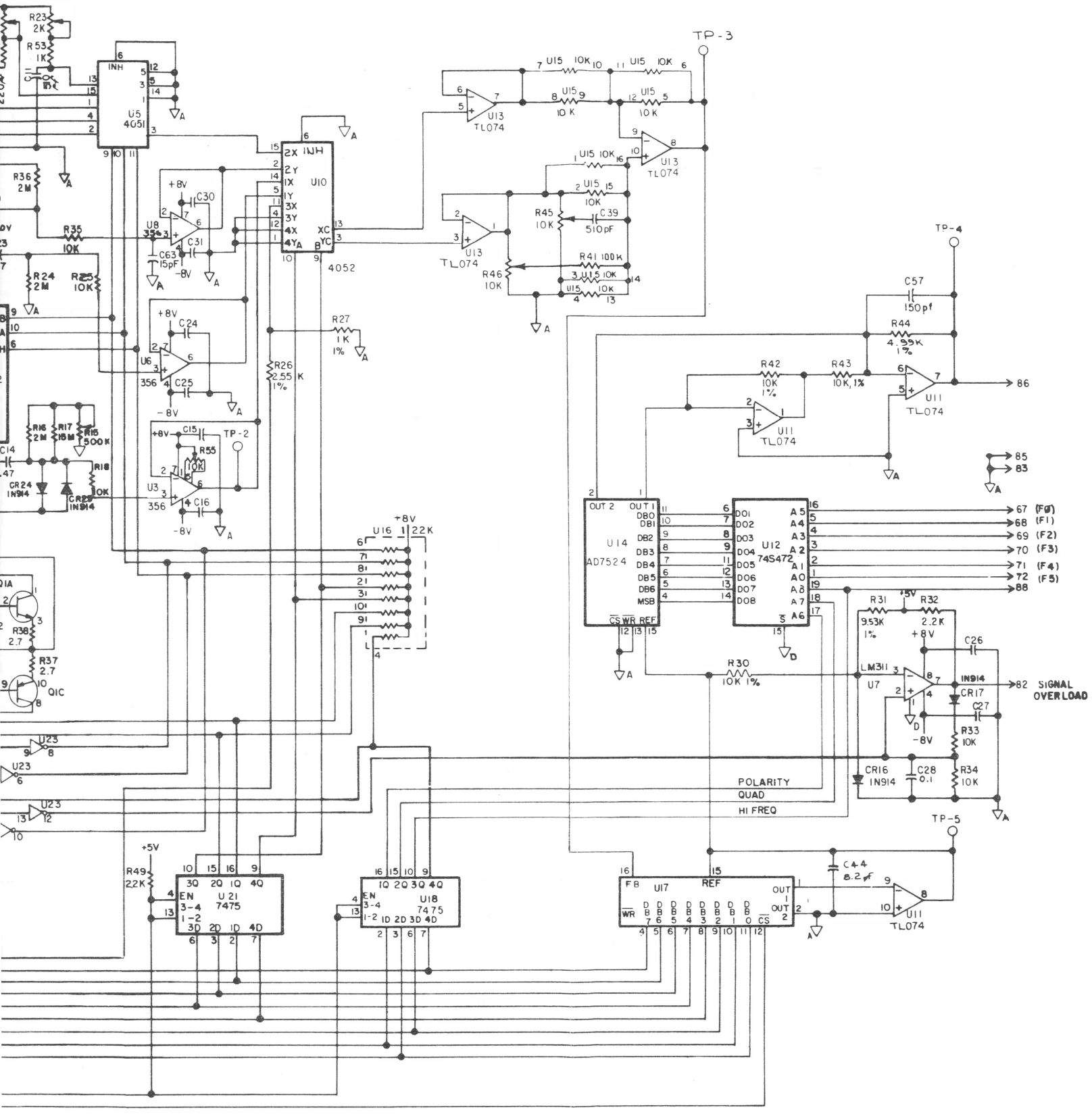

%.

; ARE 0.1 μF.

R PANEL.

Figure 5-5. Analog Circuit Assembly (P/N 53675)

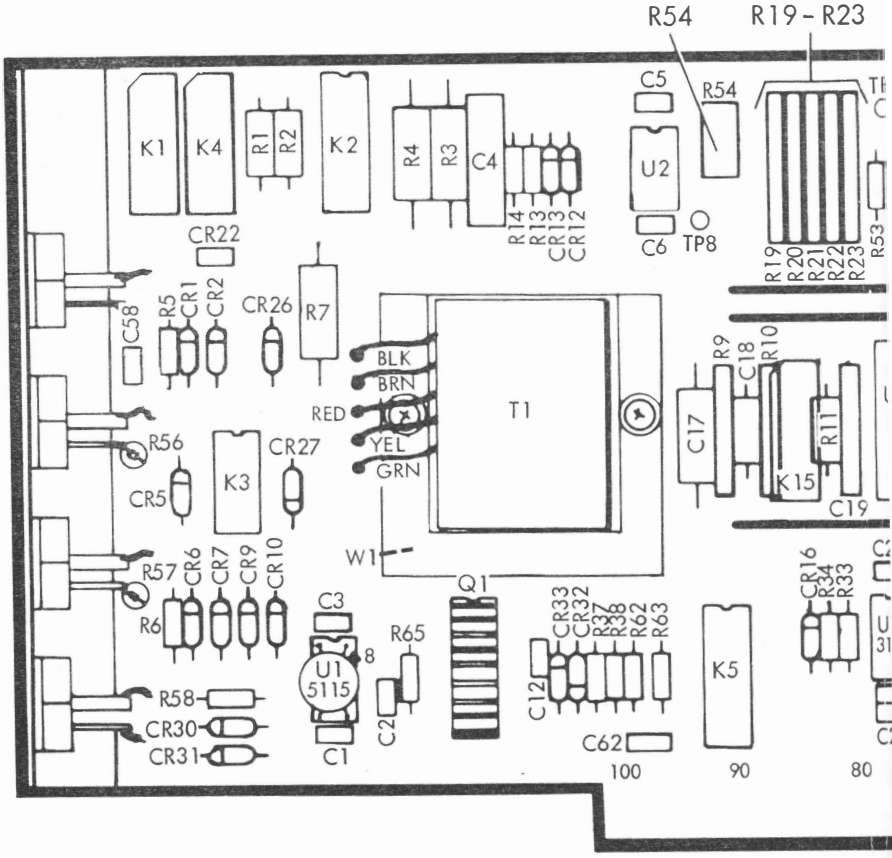
R54
R19 - R23
K1
K4
R1
R2
K2
R4
R3
C4
C5
R54
U2
C6
TP8
R14
R13
CR13
CR12
R19
R20
R21
R22
R23
CR22
C58
R5
CR1
CR2
CR26
R7
BLK
BRN
RED
YEL
GRN
T1
R9
C18
R10
C17
R11
K15
C19
R56
CR5
K3
CR27
W1
R57
CR6
CR7
CR9
CR10
R6
C3
Q1
CR33
CR32
R37
R38
R62
R63
CR16
R34
R33
R65
U1
5115
8
C2
C1
C12
C62
K5
100
90
80

Figure 5-5.

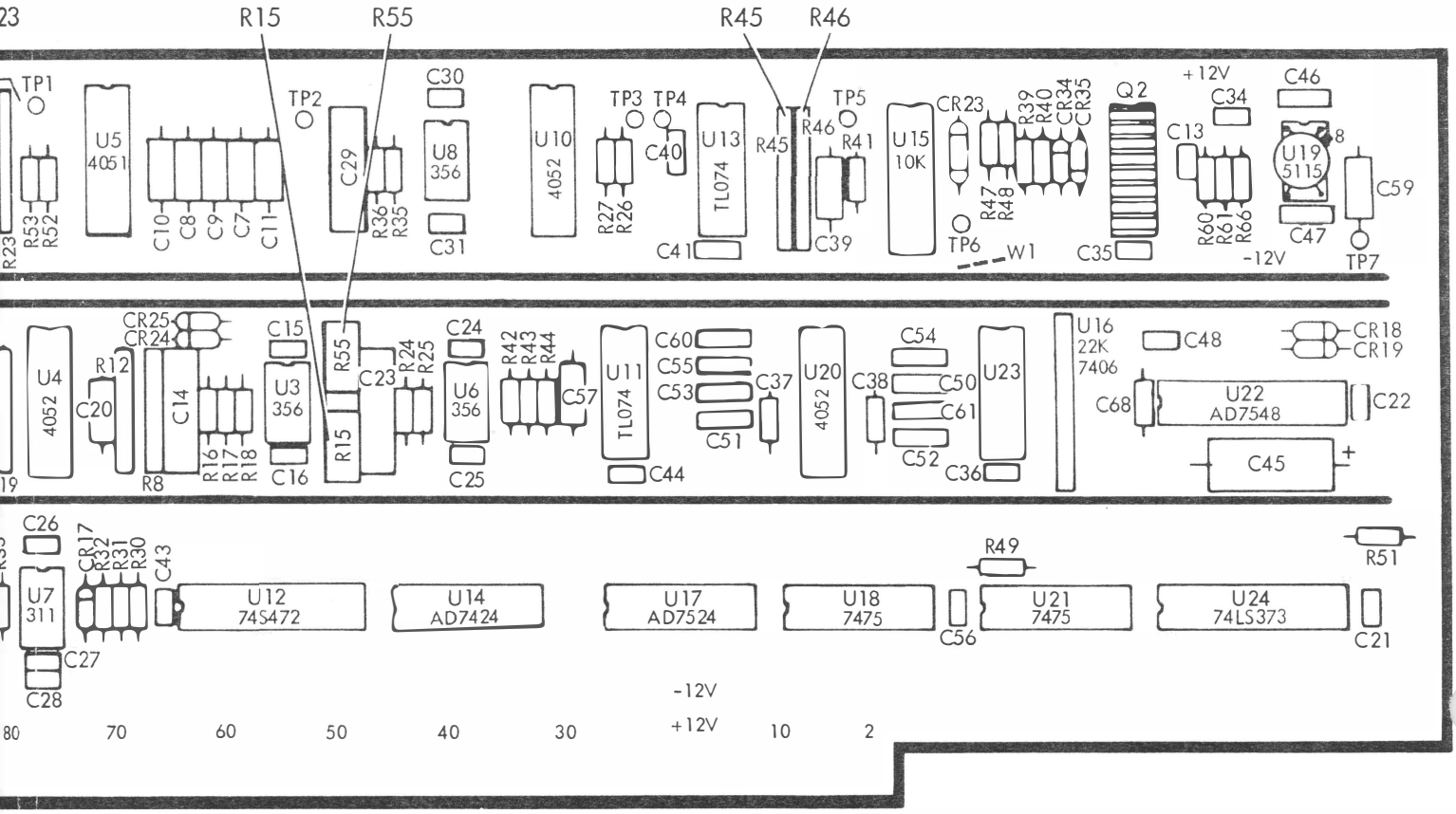

. **Analog Circuit Assembly (P/N 53675) (cont)**

5.5 DIGITAL CIRCUIT ASSEMBLY (P/N 53522)

CIRCUIT NO.	DESCRIPTION	ESI PART NO.
	PC BOARD, DIGITAL	53521
C3	CAPACITOR, 0.068 microfarad, 250V, POLY	47081
C4,C5,C7,C10, C11,C12,C13, C15,C17,C19, C25,C26	CAPACITOR, 0.01 microfarad, 50V, 20%, DIP	54326
C6	CAPACITOR, 100 picofarad, 1kV	12241
C8,C9,C27	CAPACITOR, 25 microfarad, 25V	01941
C18	CAPACITOR, 10 picofarad, 1kV	43277
C28	CAPACITOR, 0.01 microfarad, 50V, 20%	45658
CR1,CR2	DIODE, 1N914A	12356
R1	RESISTOR, Variable, 50 kilohm	12091
R2	RESISTOR, 255 kilohm, 1%	21228
R3	RESISTOR, 1 megohm, 1%	18236
R4-R6,R8,R19	RESISTOR, 10 kilohm, 10%, 1/4W	13933
R7	RESISTOR, 3.3 kilohm, 5%, 1/4W	13926
R9	RESISTOR, 10 kilohm, 1%	21740
R10	RESISTOR, 249 ohm, 1%	21724
R11	RESISTOR, 1 megohm, 10%, 1/4W	13960
R12-R14	RESISTOR, 2.2 kilohm, 10%, 1/4W	13924
R15	RESISTOR, 33 kilohm, 10%, 1/4W	13939
R16,R18	RESISTOR, 100 kilohm, 10%	13945
R17	RESISTOR, 1 kilohm, 10%	13920
R20	RESISTOR, 4.7 kilohm, 5%, 1/4W	13927
U1	IC AD7519JN	46476
U2,U12	DIP RESISTOR, 10 kilohm, R698-3-R10K	43077
U3	IC, TL074	43299
U4	IC, 7406	20678
U5	IC, LM339	40849
U6	IC, 7474	26225
U7,U11	IC, 7400	20600

5.5 DIGITAL CIRCUIT ASSEMBLY (P/N 53522) (cont)

CIRCUIT NO.	DESCRIPTION	ESI PART NO.
U8	IC, 7420	20604
U9	IC, REF02CJ OR MC1404U5	45654
U10	IC, 7404	20695
U13	IC, DAC08	44264
U14	IC, NE5534N, OPAMP	46406
U15,U16,U19, U22-U25, U30,U31	IC, SN74LS163A	45647
U17	IC, PROGRAMMED PROM DGTL	53959
U18	IC, 74LS139	45656
U20	IC, 7410	20603
U21,U28	IC, DP8304B	45262
U26	IC, DM8131	45527
U27	IC, 8255A	45650
U29	IC, 8253-5	49185
	GROUND BRACKET, PCB	45951
	POWER BUS STRIP	23997
	SOCKET, 14 PIN DIP	19189
	SOCKET, 16 PIN DIP	20860
	SOCKET, 20 PIN DIP	45660
	SOCKET, 24 PIN DIP	41492
	SOCKET, 40 PIN DIP	41342
	SOCKET, 8 PIN DIP	22410

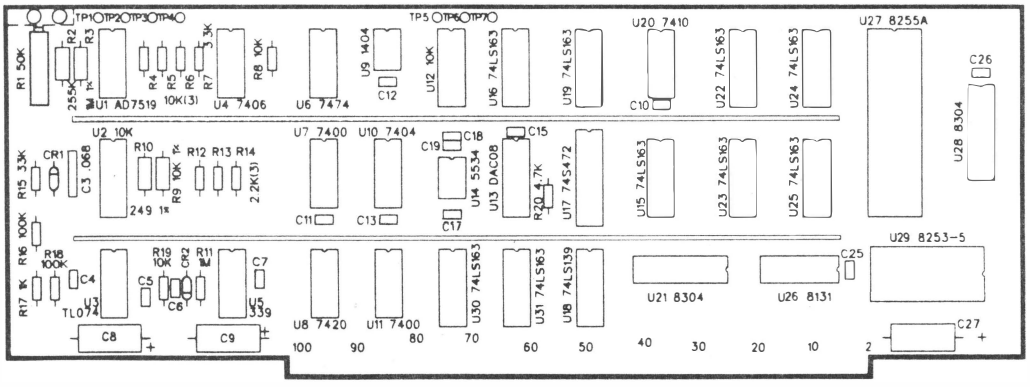

Figure 5-6. Digital Circuit Assembly (P/N 53522)

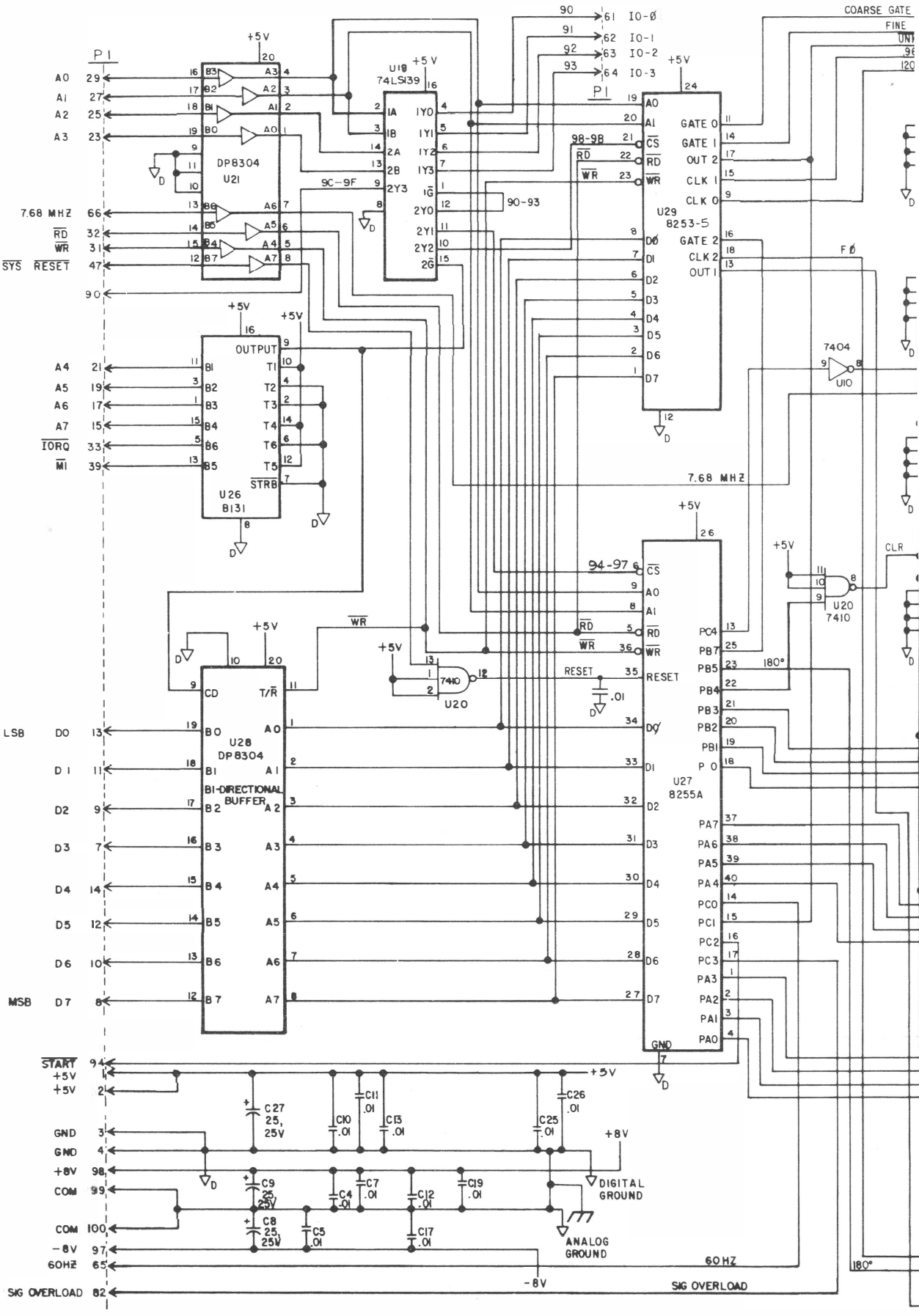
P1
A0
A1
A2
A3
7.68 MHZ
RD
WR
SYS RESET
DP8304
U21
U19
74LS139
9C-9F
90-93
90
91
92
93
IO-0
IO-1
IO-2
IO-3
98-9B
U29
8253-5
GATE 0
GATE 1
OUT 2
CLK 1
CLK 0
GATE 2
CLK 2
OUT 1
F0
7404
U10
COARSE GATE
FINE
A4
A5
A6
A7
IORQ
M1
OUTPUT
U26
8131
STRB
94-97
RESET
.01
U20
7410
CLR
180°
LSB
MSB
D0
D1
D2
D3
D4
D5
D6
D7
U28
DP8304
BI-DIRECTIONAL
BUFFER
T/R
CD
U27
8255A
PA7
PA6
PA5
PA4
PC0
PC1
PC2
PC3
PA3
PA2
PA1
PA0
PB7
PB5
PB4
PB3
PB2
PB1
P0
START
GND
+8V
COM
-8V
60HZ
SIG OVERLOAD
C27
25, 25V
C10 .01
C11 .01
C13 .01
C25 .01
C26 .01
C9 25 25V
C4 .01
C7 .01
C12 .01
C19 .01
C8 25 25V
C5 .01
C17 .01
DIGITAL GROUND
ANALOG GROUND

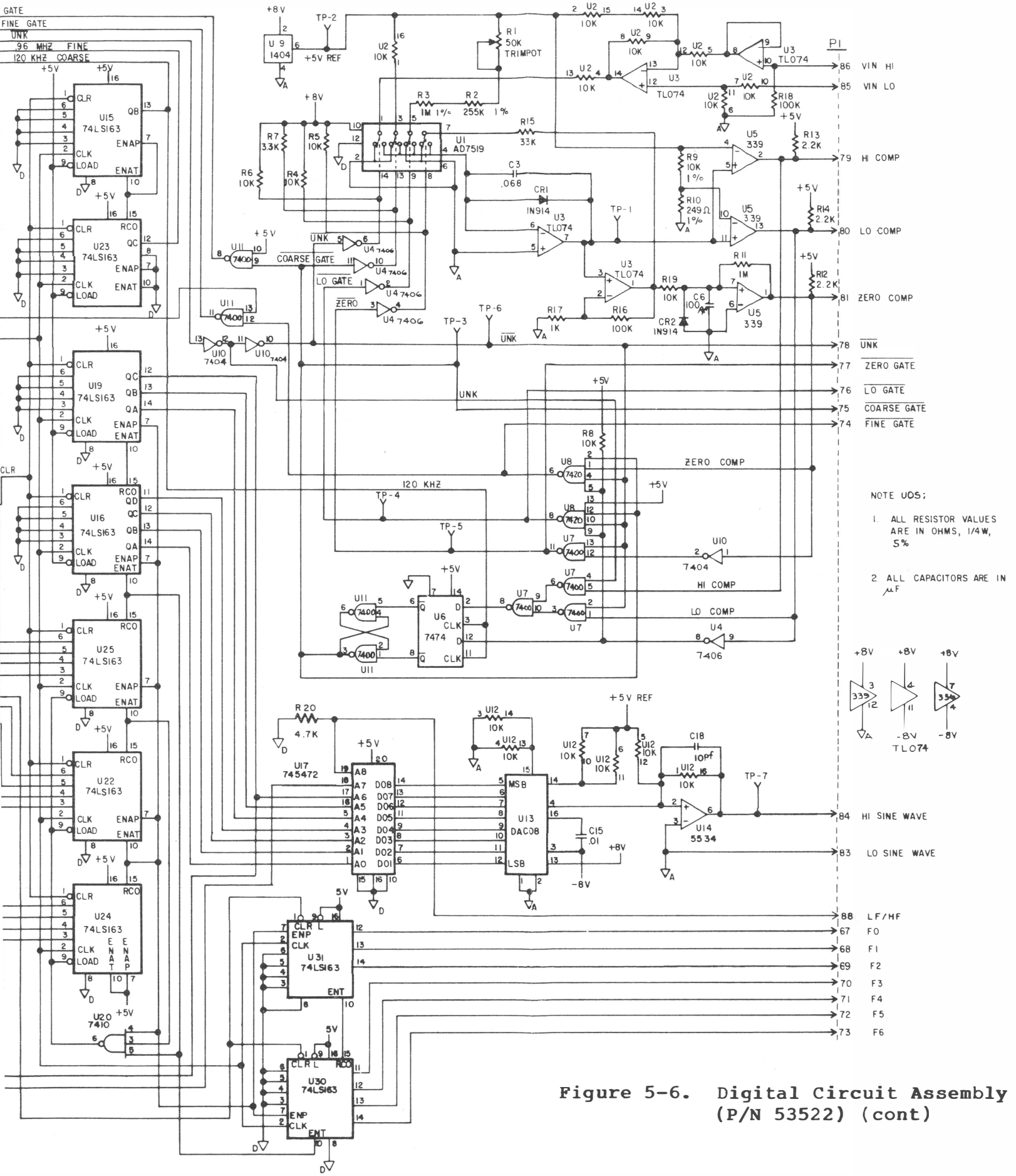

Figure 5-6. Digital Circuit Assembly (P/N 53522) (cont)

5.6 CRT SUBASSEMBLY (P/N 46095)

CIRCUIT NO.	DESCRIPTION	ESI PART NO.
	CASE, LOWER CRT	45075
	SUBASSEMBLY, BACK PANEL	48364
	PANEL, SEPARATOR, CRT	45291
	BRACKET, PCB MT	45204
	BRACKET, CRT LH	45783
	BRACKET, CRT	44825
	INSULATOR, POWER SWITCH	45277
	ACTUATOR, POWER SWITCH	45279
	SPACER, POWER SWITCH	45281
	BRACKET, PIVOT ROD	45366
	CRT 5 INCH	45878
	ASSEMBLY, DEFLECTION YOKE	48704
	CABLE, CRT - VIDEO BOARD	46504
	SWITCH, POWER, PUSHBUTTON	23164
	SPRING, RETURN	46505
	CIRCUIT ASSEMBLY, VIDEO	48642
	INSERT, SHEET EDGE	50749
	STANDOFF, COVER	46292

5.6.1 Video Circuit Assembly (P/N 48642)

CIRCUIT NO.	DESCRIPTION	ESI PART NO.
	PC CARD, VIDEO	48641
C1	CAPACITOR, 22 microfarad, 15V, TANT	18852
C2	CAPACITOR, 390 picofarad, POLY	29299
C3,C11	CAPACITOR, 1000 picofarad, POLY	07094
C4	CAPACITOR, 0.01 microfarad, 100V, MYLAR	12260
C5,C9	CAPACITOR, 1 microfarad, CERAMIC	43852
C6	CAPACITOR, 0.47 microfarad, 100V, 5%	45645
C7,C8,C12,C13		
C14	CAPACITOR, 47 microfarad, 50V, RADIAL, ELEC	46482
C10	CAPACITOR, 0.01 microfarad, 100V, CERAMIC	12144
C15	CAPACITOR, 0.022 microfarad, 200V, MYLAR	48665
C16	CAPACITOR, 10 microfarad, 35V, MYLAR	48532
C17,C18,C19,		
C20	CAPACITOR, 0.01 microfarad, 1000V, CERAMIC	46484
CR1,CR2,CR3,		
CR5,CR6,CR7	DIODE, 1N914A	12356
CR4	DIODE, 1N4736, 6.8V ZENER	12443
CR8,CR9,CR10,		
CR11	DIODE, 1N4007	12161
L1	COIL, HORIZONTAL LINEARITY	48703
L2	COIL, HORIZONTAL WIDTH	48702
P301,P302		
P304	CONNECTOR, 8 PIN MALE, PC	46631
P303	CONNECTOR, 4 PIN MALE, PC	46629
P305	CONNECTOR, 3 PIN MALE, PC	46847
Q1,Q3,Q5	TRANSISTOR, 2N3904	18751
Q2,Q4	TRANSISTOR, 2N3906	18754
Q6	FET, VN10KM	49062
Q7	FET,IRF630	48725
R1	TRIMPOT, 220 ohm, PC, 3/4T	48736
R2	RESISTOR, 68 ohm, 1/4W, 10%	13902
R3	RESISTOR, 3.9 kilohm, 1/4W, 10%	13929

5.6.1 Video Circuit Assembly (P/N 48642) (cont)

CIRCUIT NO.	DESCRIPTION	ESI PART NO.
R4,R7,R8,R9		
R10,R18,R28	RESISTOR, 10 kilohm, 1/4W, 10%	13933
R5	RESISTOR, 27 kilohm, 1/4W, 10%	13938
R6,R21	RESISTOR, 100 ohm, 1/4W, 10%	13907
R11,R27,R30,		
R31	RESISTOR, 100 kilohm, 1/4W, 10%	13945
R12	RESISTOR, 220 kilohm, 1/4W, 10%	13949
R13	RESISTOR, 1 megohm, 1/4W, 1%	18236
R14	RESISTOR, 1 kilohm, 1/4W, 10%	13920
R15,R19	RESISTOR, 3.3 kilohm, 1/4W, 10%	13926
R16,R17	TRIMPOT, 5 kilohm, PC, 3/4T	48724
R20,R25,R26	RESISTOR, 49.9 kilohm, 1/4W, 1%	21747
R22,R24,R29	RESISTOR, 1 ohm, 1/2W, 10%	12448
R23	RESISTOR, 33 ohm, 1/2W, 10%	46485
R32	TRIMPOT, 1 megohm, PC, 3/4T	48737
T1	TRANSFORMER, HIGH VOLTAGE	48705
U1	IC, CA3140, OP-AMP	48723
U2,U3	IC,UA759, PWR OP-AMP	46479
U4	IC, 555, TIMER	20721
	SOCKET, 8 PIN DIP	22410
	SHOCK SHIELD, VIDEO	49191
	BOX, H.V. XFMR	49190
	INSERT, SHEET EDGE 6-32	50740
	STANDOFF, PLASTIC PCB SUPPORT	49398
	SCREW, 6-32 x 0.375LG PHP	03643
	SCREW, 4-40 x 0.312 LG PHP	03630
	SOLDER LUG, #4	05890
	SHOULDER WASHER, #4 INSULATING	41937
	INSULATOR, RECTANGULAR SILICON	46256
	WIRE, #22 SOLID	06091
	BUSHING, 0.312 x 0.25ID x 0.375 OD	49397

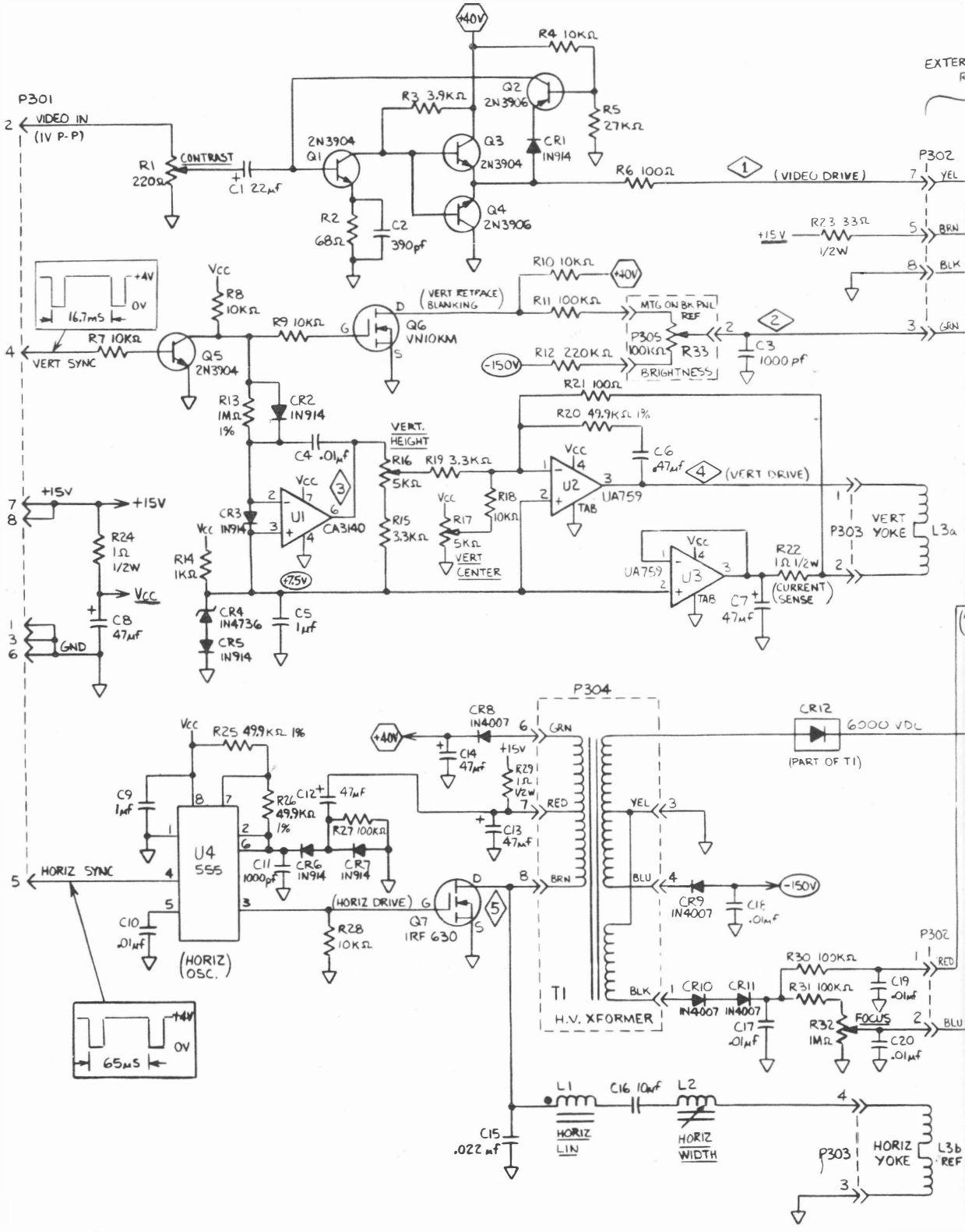
P301
VIDEO IN
(1V P-P)
CONTRAST
R1 220Ω
C1 22μf
+40V
R4 10KΩ
R3 3.9KΩ
Q2 2N3906
R5 27KΩ
2N3904 Q1
Q3 2N3904
CR1 IN914
Q4 2N3906
R2 68Ω
C2 390pf
R6 100Ω
(VIDEO DRIVE)
P302
YEL
+15V
R23 33Ω 1/2W
BRN
BLK
GRN
+4V
0V
16.7mS
VERT SYNC
R7 10KΩ
Q5 2N3904
Vcc
R8 10KΩ
R9 10KΩ
Q6 VN10KM
(VERT RETRACE BLANKING)
R10 10KΩ
R11 100KΩ
MTG ON BK PNL REF
P305 100KΩ R33 BRIGHTNESS
C3 1000 pf
-150V
R12 220KΩ
R13 1MΩ 1%
CR2 IN914
C4 .01μf
VERT. HEIGHT
R16 5KΩ
R19 3.3KΩ
R21 100Ω
R20 49.9KΩ 1%
C6 .47μf
(VERT DRIVE)
U2 UA759
TAB
U1 CA3140
CR3 IN914
R15 3.3KΩ
R17 5KΩ VERT CENTER
R18 10KΩ
R14 1KΩ
+7.5V
CR4 IN4736
CR5 IN914
C5 1μf
+15V
R24 1Ω 1/2W
Vcc
C8 47μf
GND
U3 UA759
R22 1Ω 1/2W (CURRENT SENSE)
C7 47μf
P303
VERT YOKE
L3a
P304
CR8 IN4007
C14 47μf
R29 1Ω 1/2W
C13 47μf
CR12
6000 VDC
(PART OF T1)
R25 49.9KΩ 1%
C9 1μf
R26 49.9KΩ 1%
C12 47μf
R27 100KΩ
C11 1000pf
CR6 IN914
CR7 IN914
U4 555
HORIZ SYNC
C10 .01μf
(HORIZ OSC.)
(HORIZ DRIVE)
R28 10KΩ
Q7 IRF 630
CR9 IN4007
C18 .01μf
-150V
T1
H.V. XFORMER
CR10 IN4007
CR11 IN4007
R30 100KΩ
R31 100KΩ
C19 .01μf
C17 .01μf
R32 1MΩ FOCUS
C20 .01μf
P302
RED
BLU
+4V
0V
65μS
L1 HORIZ LIN
C16 10μf
L2 HORIZ WIDTH
C15 .022 μf
P303
HORIZ YOKE
L3b
REF

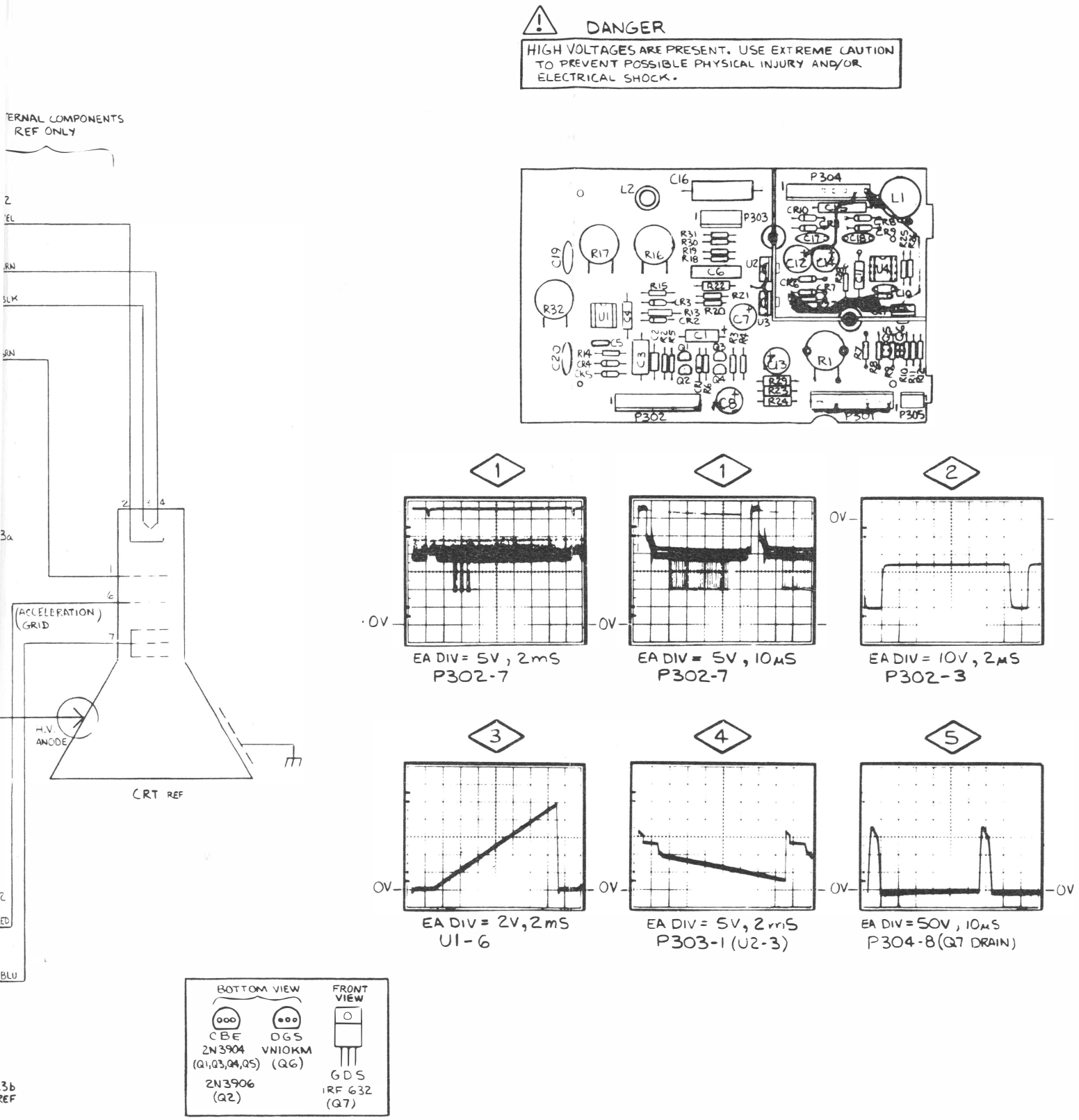

Figure 5-7. Video Circuit Assembly (P/N 48642)

5.6.2 Back Panel Subassembly (P/N 48364)

CIRCUIT NO.	DESCRIPTION	ESI PART NO.
	REAR PANEL, LH	45070
	BRACKET, UPPER BACK PANEL	45241
	BRACKET, LOWER BACK PANEL	45242
	FAN	45704
	RECEPTACLE, AC	24078
	SWITCH, 120-220	18424
	SCREEN, FAN	46289
	FILTER, FAN	46932
	SCREW, 4-40 x 0.250L BH CAP	50533
	SCREW, 10-32 x 0.500L, TAMPER PROOF	45869
	WASHER, LOCK #4	03577
	WASHER, FLAT #10	05921
	WASHER, LOCK #10	03586
	THUMB SCREW, #4 CAP	27959
	SOLDER LUG, #10	05911
	SWITCH, POWER, PUSHBUTTON	23164
	REWORK, COVER	46290
	CABLE, BACK PANEL - POWER SUPPLY	47115
	MOUNT, FAN GUARD	46038
	SPACER, FAN MOUNT, 0.450 OD x 0.15 OT	46291
	BAR, MOUNTING FAN FILTER	46264
	FUSE HOLDER HIGH PROFILE	45968
	3AG FUSE CARRIER, GRAY	45966
	3AG FUSE 2A SLOW BLOW	13700
	5 x 20 METRIC FUSE CARRIER, BLK	45965
	FUSE, 1.6A SLOW BLOW (EUROPE)	52676
	NUT, HEX, 4-40	03538
	NUT, HEX, 10-32	03547
	ASSY, BRIGHTNESS CONTROL	49304
	KNOB, BLACK	49239

5.7 POWER SUPPLY MODULE ASSEMBLY (P/N 45845)

CIRCUIT NO.	DESCRIPTION	ESI PART NO.
	CIRCUIT ASSEMBLY, POWER SUPPLY B1	45490
	CIRCUIT ASSEMBLY, POWER SUPPLY B2	45488
	STANDOFF, 0.37 OD x 0.5 LG x 6-32	45278
	STANDOFF, 0.31 OD x 2.937 LG x 6-32	45585
	STANDOFF, 0.31 OD SLOTTED x 6-32	45584
	BRACKET, POWER SUPPLY MTG	45583
	INSULATOR, DO-4 DIODE STYLE	46546
	CABLE ASSEMBLY, 3 PIN MOLEX	47114
	CABLE ASSY, 2 PIN MOLEX	47113
	SHIELD, POWER SUPPLY BOARD LOWER	45950
	LOCTITE 601	50576

5.7.1 Power Supply (B1) Circuit Assembly (P/N 45490)

CIRCUIT NO.	DESCRIPTION	ESI PART NO.
	PC BOARD, POWER SUPPLY (B1)	45489
C1	CAPACITOR, 0.005 microfarad, 1kV CER	01919
C2	CAPACITOR, 0.1 microfarad, 250VAC MYL	54501
C3,C4	CAPACITOR, 750 microfarad, 200V ELEC	46612
C5	CAPACITOR, 0.0015 microfarad, 600VDC POLY	26203
C6	CAPACITOR, 0.1 microfarad, 600VDC MYLAR	46609
C7,C8,C10	CAPACITOR, 100 microfarad, 25V ELEC	46614
C9,C13,C14	CAPACITOR, 10 microfarad, 16V ELEC	46616
C11	CAPACITOR, 0.001 microfarad, 1kV CER	21215
C12	CAPACITOR, 0.01 microfarad, 50V CER	12144
C15	CAPACITOR, 0.01 microfarad, 5% CER	46607
CR1	M.O.V, 1.5 KE10C, 10V	42632
CR2	BRIDGE RECT, W08M	46404
CR3,CR9,CR10	DIODE, 1N4937	45856
CR4	DIODE, MR818	45850
CR5,CR11,		
CR13-CR15	DIODE, 1N914A	12356
CR6	DIODE, ZENER 1N4746 18V	44027
CR7,CR8	DIODE, 1N4005	01779
CR12	DIODE, ZENER 1N4737A, 7.5V +/- 5%	12353
CR16,CR17	DIODE, CLAMP, VS150, LA10A	42633
L1	INDUCTOR, (ESI TOROID)	46494
P101	CONNECTOR, 9 PIN, STRAIGHT, MOLEX (MALE)	
	POLARIZED	46634
P102,P103,	CONNECTOR, 3 PIN, STRAIGHT, MOLEX (MALE)	
P104	POLARIZED	46627
P105	CONNECTOR, 2 PIN, STRAIGHT, MOLEX (MALE)	
	POLARIZED	46625
Q1,Q2	TRANSISTOR, MJE13003	45863
Q3	TRANSISTOR, 2N6543 (TO-3)	45864
Q4	TRANSISTOR, D42C9	45865
Q5,Q9	TRANSISTOR, 2N2905A	22713

5.7.1 Power Supply (B1) Circuit Assembly (P/N 45490) (Cont)

CIRCUIT NO.	DESCRIPTION	ESI PART NO.
Q6	TRANSISTOR, TIP-30C	45862
Q7,Q8,Q10, Q11,Q12	TRANSISTOR, 2N2222	27671
R1	RESISTOR, 2.2 kilohm, 1/4W, 10%	13924
R2,R3	RESISTOR, 150 kilohm, 1/2W, 10%	15986
R4	RESISTOR, 3.9 kilohm, 5W, 1%, WW, DALE	46496
R5	RESISTOR, 470 kilohm, 1/2W	01649
R6	RESISTOR, 82 ohm, 1/2W	06183
R7	RESISTOR, 0.200 ohm, 1/4W, WW, FILM	46497
R8	RESISTOR, 56 ohm 1/4W	46746
R9	RESISTOR, 27 ohm, 1W, 10%	46495
R10,R12,R29	RESISTOR, 470 ohm, 1/4W	13915
R11	RESISTOR, 30 ohm, 3W, 5%, WW	46464
R13,R14,R28	RESISTOR, 1 kilohm, 1/4W, 10%	13920
R15,R17	RESISTOR, 220 ohm, 1/4W	13911
R16	RESISTOR, 1.8 kilohm, 1/4W	13923
R18	RESISTOR, 820 ohm, 1/4W	13919
R19	RESISTOR, 1.5 kilohm, 1/4W	13922
R20	RESISTOR, 390 ohm, 1/4W	13914
R21	RESISTOR, 120 ohm, 1/4W	13908
R22,R23	RESISTOR, 6.8 kilohm, 1/4W, 10%	13930
R24	RESISTOR, 10 kilohm, 1/4W	13933
R25	RESISTOR, 100 ohm, 1/4W	13907
R26	RESISTOR, 4.7 kilohm, 1/4W, 5%	46499
R27	RESISTOR, 20 kilohm, 20W, WW	46410
RV1	VARISTOR, (AMETEX RODAN DIV SG.5)	46493
U1	OPTICAL COUPLER, MCT-6	24008
U2	VOLT REGULATOR, LM7905 CT, -5V	41876
U3	VOLT REGULATOR, LM7812 CT, 12V	46412
U4	CONTROL IC SG 3524	43825
U5	OPTICAL COUPLER, MCT-2E	46403
	CABLE TIE (SMALL)	06147

5.7.1 Power Supply (Bl) Circuit Assembly (P/N 45490) (Cont)

CIRCUIT NO.	DESCRIPTION	ESI PART NO.
	SOCKET, 6 PIN, DIP	45831
	SOCKET, 8 PIN, DIP	22410
	SOCKET, 16 PIN DIP	20860
	SOCKET, T03	12262
	HEATSINK Bl	45587
	INSULATOR SILICON TO -3 STYLE	43176

WARNING

THIS INFORMATION IS FOR USE BY ESI QUALIFIED SERVICE PERSONNEL ONLY.

DANGER

⏚ = CIRCUIT COMMON; HAZARDOUS VOLTAGE.

ALL PARTS OF THIS ASSEMBLY INCLUDING CIRCUIT COMMON ARE AT OR ABOVE POWER LINE VOLTAGE. AVAILABLE ENERGY AT ANY POINT MAY BE LIMITED ONLY BY INPUT FUSE. DO NOT ATTEMPT SERVICE OPERATIONS WITHOUT LINE ISOLATION FOR BOTH THIS ASSEMBLY AND TEST EQUIPMENT. FAILURE TO OBSERVE THIS PRECAUTION MAY RESULT IN SEVERE INJURY OR DEATH.

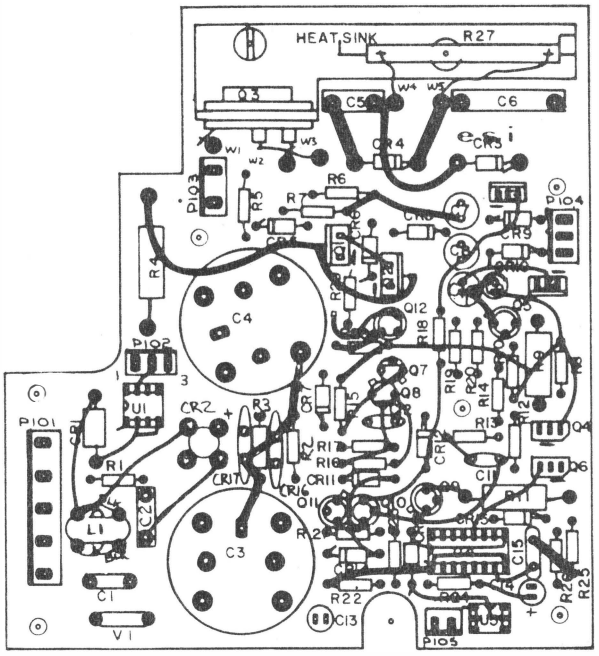

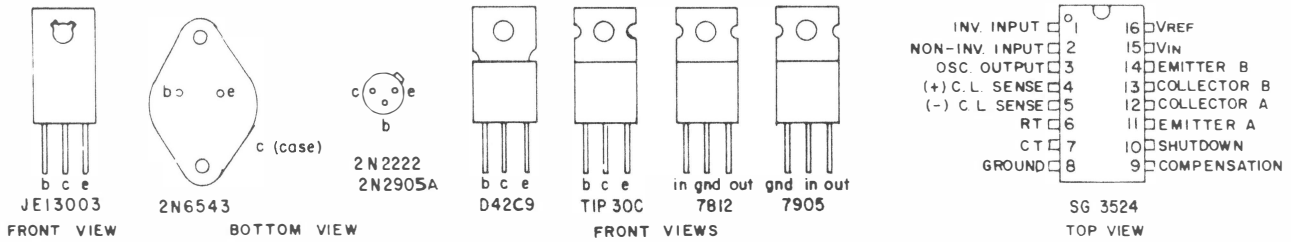

Figure 5-8. Power Supply Bl Circuit Assembly (P/N 45490)

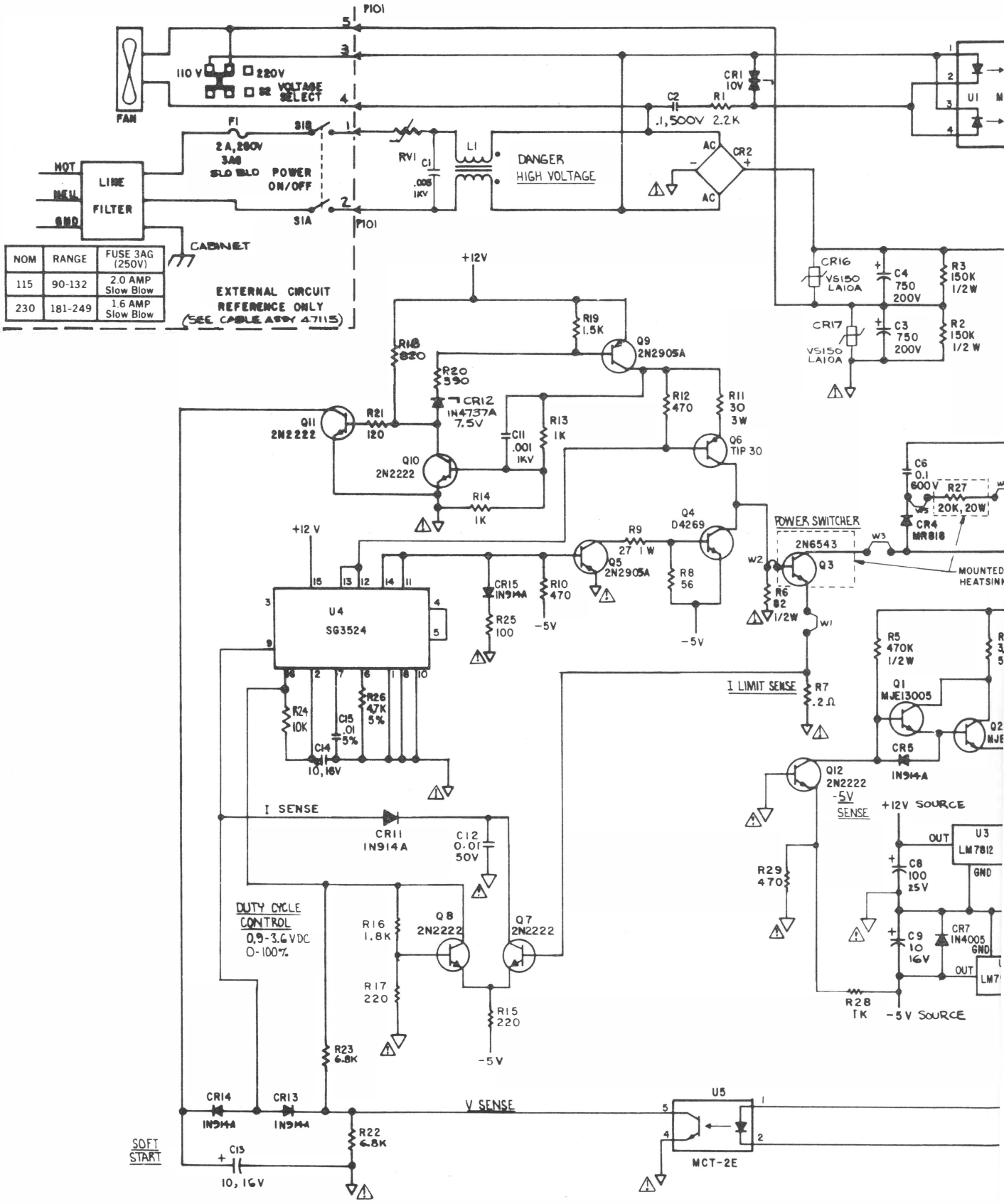
P101
FAN
110 V
220V
VOLTAGE SELECT
F1
2A, 250V
3AG
SLO BLO
S1B
POWER ON/OFF
S1A
HOT
NEU
GND
LINE FILTER
CABINET
RV1
C1
.005 1KV
L1
DANGER
HIGH VOLTAGE
CR1 10V
C2 .1, 500V
R1 2.2K
CR2
AC
AC
NOM | RANGE | FUSE 3AG (250V)
115 | 90-132 | 2.0 AMP Slow Blow
230 | 181-249 | 1.6 AMP Slow Blow
EXTERNAL CIRCUIT REFERENCE ONLY (SEE CABLE ASSY 47115)
+12V
R19 1.5K
Q9 2N2905A
R18 820
R20 390
CR12 IN4737A 7.5V
R12 470
R11 30 3W
Q11 2N2222
R21 120
C11 .001 1KV
R13 1K
Q10 2N2222
Q6 TIP 30
R14 1K
CR16 VS150 LA10A
C4 750 200V
R3 150K 1/2W
CR17 VS150 LA10A
C3 750 200V
R2 150K 1/2W
C6 0.1 600V
R27 20K, 20W
CR4 MR818
Q4 D4269
POWER SWITCHER
2N6543
Q3
MOUNTED HEATSINK
+12 V
R9 27 1W
Q5 2N2905A
R8 56
-5V
R6 82 1/2W
U4 SG3524
CR15 IN914A
R10 470
R25 100
-5V
I LIMIT SENSE
R7 .2Ω
R5 470K 1/2W
Q1 MJE13005
CR5 IN914A
Q12 2N2222
-5V SENSE
R24 10K
R26 47K 5%
C15 .01 5%
C14 10, 16V
I SENSE
CR11 IN914A
C12 0.01 50V
+12V SOURCE
U3 LM7812
C8 100 25V
R29 470
DUTY CYCLE CONTROL
0.9-3.6 VDC
0-100%
R16 1.8K
Q8 2N2222
Q7 2N2222
C9 10 16V
CR7 IN4005
R17 220
R15 220
R28 1K
-5V SOURCE
R23 6.8K
CR14 IN914A
CR13 IN914A
V SENSE
U5
MCT-2E
R22 6.8K
SOFT START
C13 10, 16V

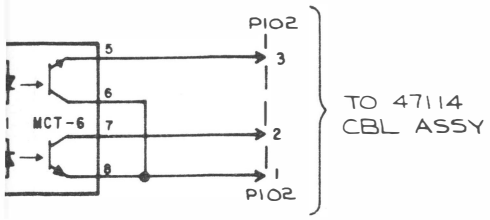

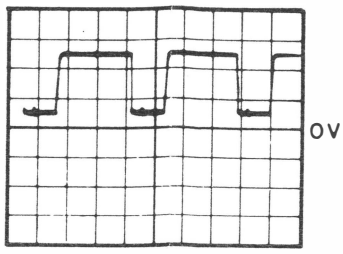

EACH DIV. = 5V, 10 μS

BASE of Q6

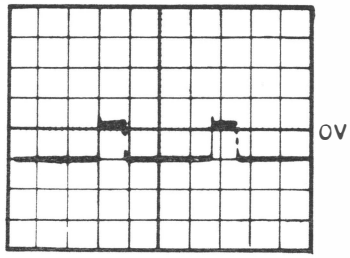

EACH DIV. = 5V, 10 μS

BASE of Q3

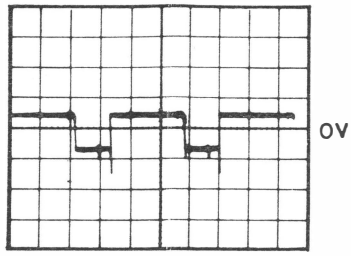

EACH DIV. = 2V, 10 μS

BASE of Q5

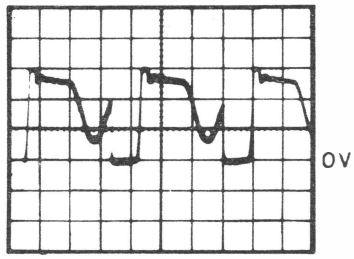

EACH DIV. = 200V, 10 μS

COLLECTOR of Q3

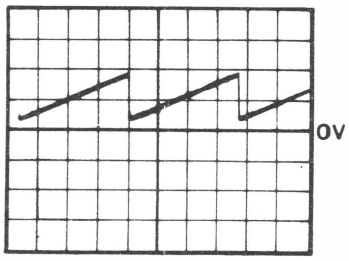

EACH DIV. = 2V, 10 μS

PIN 7 of U4

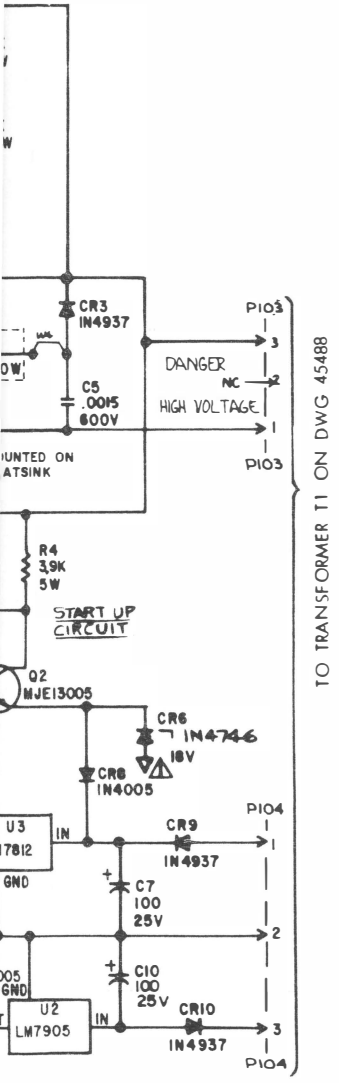

WARNING

THIS INFORMATION IS FOR USE BY ESI QUALIFIED SERVICE PERSONNEL ONLY.

DANGER

⚠ ⏚ = CIRCUIT COMMON; HAZARDOUS VOLTAGE.

ALL PARTS OF THIS ASSEMBLY INCLUDING CIRCUIT COMMON ARE AT OR ABOVE POWER LINE VOLTAGE. AVAILABLE ENERGY AT ANY POINT MAY BE LIMITED ONLY BY INPUT FUSE. DO NOT ATTEMPT SERVICE OPERATIONS WITHOUT LINE ISOLATION FOR BOTH THIS ASSEMBLY AND TEST EQUIPMENT. FAILURE TO OBSERVE THIS PRECAUTION MAY RESULT IN SEVERE INJURY OR DEATH.

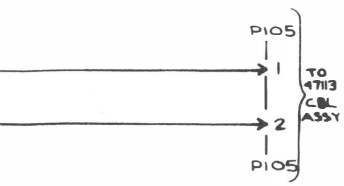

NOTES

1. ALL RESISTOR VALUES ARE IN OHMS, 1/4W, 10% UNLESS OTHERWISE STATED
2. ALL CAPACITORS ARE IN μF UNLESS OTHERWISE STATED.

Figure 5-8. Power Supply B1 Circuit Assembly (P/N 45490) (cont)

CIRCUIT NO.	DESCRIPTION	ESI PART NO.
R10,R26	RESISTOR, 82 ohm, 1/2W, 10%	06183
R11,R24	RESISTOR, 10 ohm, 1/4W, 10%	13895
R12	RESISTOR, 39 ohm, 1/4W, 10%	21219
R15	RESISTOR, 1,2 kilohm, 1/4W, 10%	13921
R16	RESISTOR, 18 kilohm, 1/4W, 10%	13936
R17	RESISTOR, 1.5 kilohm 1/4W	13922
R19	RESISTOR, 27 kilohm, 1/4W, 10%	13938
R21	RESISTOR, 2 kilohm, 1/4W, 1%	21733
R22	RESISTOR, TRIMMER, 500 ohm, 20T	12093
R23	RESISTOR, 2.49 kilohm, 1/4W, 1%	21734
R27,25	RESISTOR, 22 ohm 1/4W	12455
R28	RESISTOR, 100 ohm, 1/4W, 10%	13907
R29	RESISTOR, 2.7 kilohm, 1/4W, 10%	13925
R30	RESISTOR, 10 kilohm, 1/4W, 10%	13933
R31	RESISTOR, 330 ohm, 1W, 10%	12174
R32	RESISTANT WIRE, #19GA B. MANGANIN	05944
R33	RESISTOR, 100 kilohm, 1/4W	13945
T1	XFRMR, POWER SUPPLY	45877
U1	VOLTAGE REGULATOR, LM7815	27816
U2	VOLTAGE REGULATOR, LM7812 CT	46412
U3	VOLTAGE REGULATOR, 7912C	47296
U4	VOLTAGE REGULATOR, LM7808	46622
U5	VOLTAGE REGULATOR, LM7908	46621
U6	COMPARATOR, LM311	29544
U7, U8	OP AMP, 741	20668
	GREASE, TEMP CONDUCTIVE	08506
	HEATSINK	45586
	INSULATOR, SILICON TO-220 TRANSISTOR	46256
	MOUNTING KIT, D05 DIODE	47646
	SLEEVING, #8 BLACK SILICON RUBBER	05883
	SOCKET, 8 PIN DIP	22410
	CRIMP TERMINAL	45887

5.7.2 Power Supply (B2) Circuit Assembly (P/N 45488)

CIRCUIT NO.	DESCRIPTION	ESI PART NO.
	PC BOARD, POWER SUPPLY	45487
C2	CAPACITOR, 420 microfarad, 25V ELEC	46524
C3,C4,C9-C16	CAPACITOR, 6.8 microfarad, 35V TANT	43792
C7-C8	CAPACITOR, 580 microfarad, 20V ELEC	46409
C17	CAPACITOR, 0.01 microfarad DISC	12144
C18,C19,C20	CAPACITOR, 2900 microfarad, 6.3V ELEC	46408
C21	CAPACITOR, 0.1 microfarad, 25V CER	24395
C23	CAPACITOR, 2000 picofarad	21214
C26,C25	CAPACITOR, 33 microfarad, RAD, 6.3V ELEC	46615
C27	CAPACITOR, 0.005 microfarad DISC	12143
C30	CAPACITOR, 0.22 microfarad, 50V	13680
C31	CAPACITOR, 0.1 microfarad	45247
CR1,CR2,CR3	DIODE, MR851 (3A)	45851
CR4	DIODE, 1N5832 STUD MOUNT	45853
CR5	DIODE, SCR, 2N3896	46619
CR6,CR7	DIODE, ZENER 1N4735 6.2V	12079
CR8,CR10, CR15,CR16	DIODE, 1N914A	12356
CR9	DIODE ZENER, ADJUSTABLE, TL430	46620
CR11,CR12, CR13,CR14	DIODE, 1N4005	13654
J103,J104	CONNECTOR, MOLEX, 3 PIN	46628
L1,L2,L3	INDUCTOR, FERRITE BEAD	47318
L4	INDUCTOR, POWER SUPPLY	47128
P201,P203	CONNECTOR, 2 PIN MOLEX (MALE) STRAIGHT POLARIZED	46625
P202	CONNECTOR, 3 PIN MOLEX (MALE) STRAIGHT POLARIZED	46627
P204	CONNECTOR, 13 PIN RECTANGLE MOLEX (MALE)	46636
R2	RESISTOR, 1 kilohm, 1/2W, 10%	01969
R13,R20	RESISTOR, 1 kilohm, 1/4W, 10% CARBON	13920
R9	RESISTOR, 1.0 ohm, 1/2W, 10%	12448

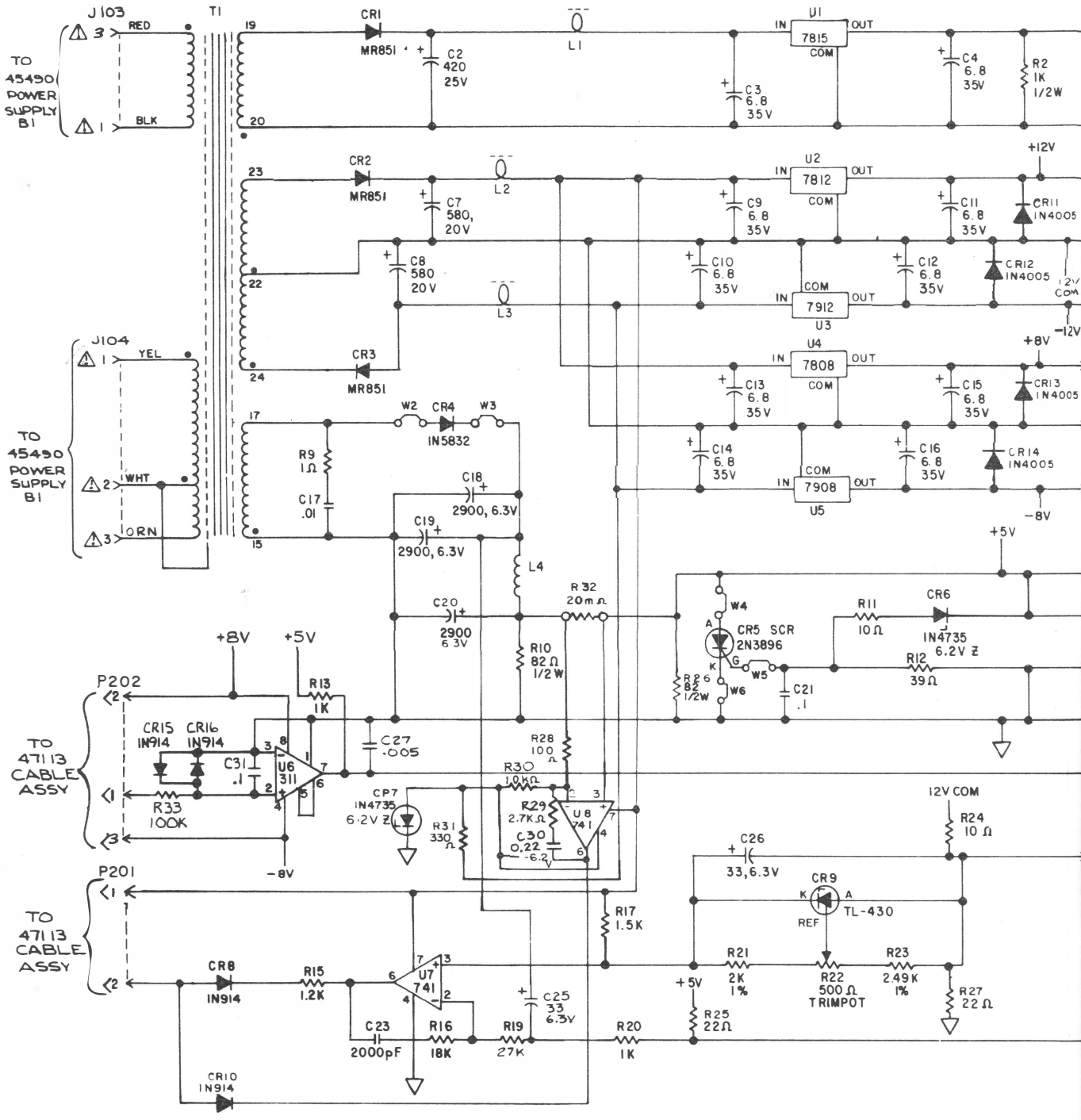

NOTES:

1. ALL RESISTOR VALUES ARE IN OHMS, 1/4W, 10% UNLESS OTHERWISE STATED.
2. ALL CAPACITORS ARE IN μF UNLESS OTHERWISE STATED.

WARNING

THIS INFORMATION
BY ESI QUALIFIED
PERSONNEL O

DANGE

= CIRCUIT COMMON; HAZARDOUS

ALL PARTS OF THIS ASSEMBLY IN
ARE AT OR ABOVE POWER LINE VOLTA
AT ANY POINT MAY BE LIMITED ONLY
ATTEMPT SERVICE OPERATIONS WITHOU
BOTH THIS ASSEMBLY AND TEST EQUIPM
THIS PRECAUTION MAY RESULT IN SEVE

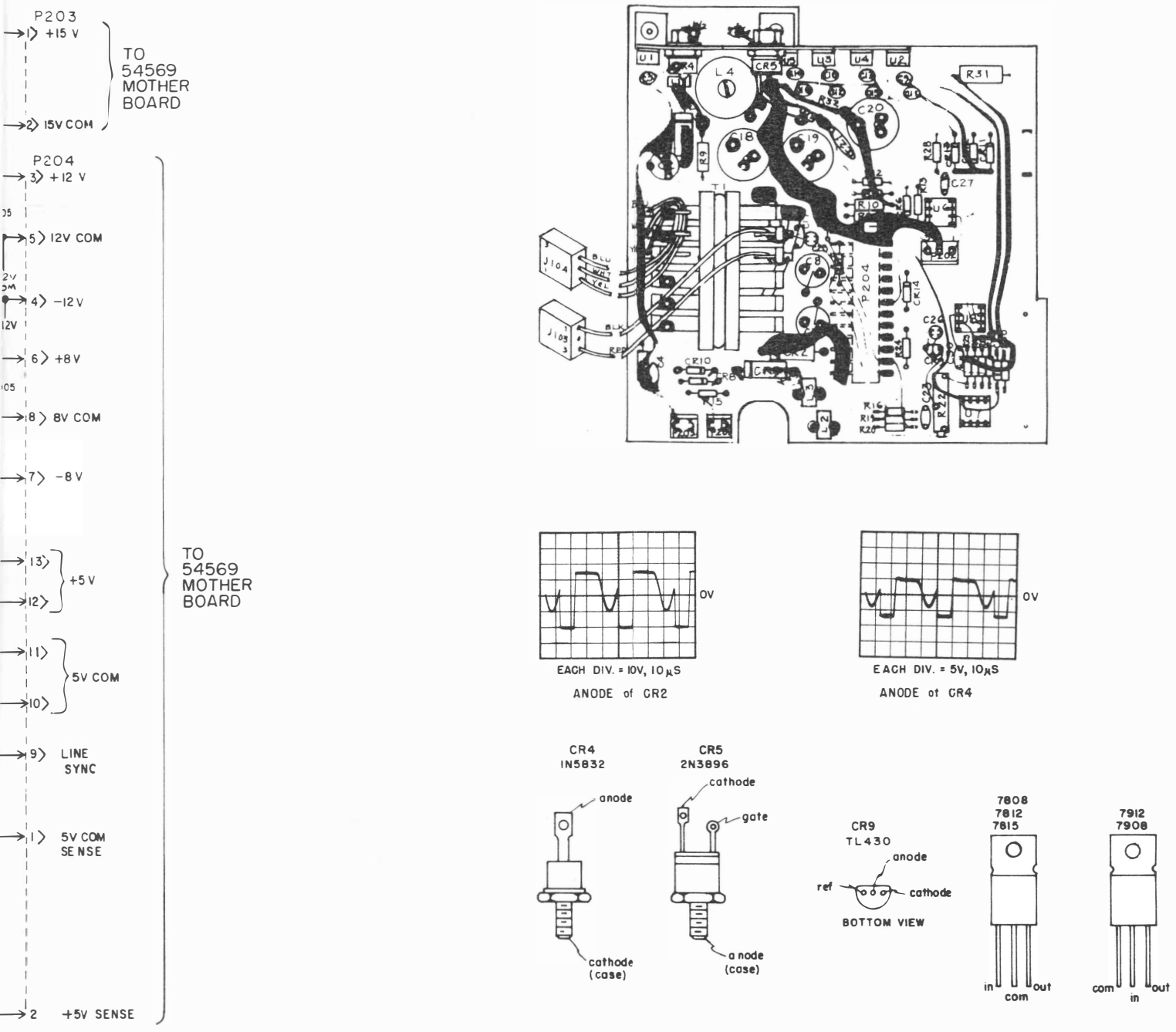

Figure 5-9. Power Supply B2 Circuit Assembly (P/N 45488)

NG

ON IS FOR USE
ED SERVICE
ONLY.

ER

OUS VOLTAGE.
INCLUDING CIRCUIT COMMON
TAGE. AVAILABLE ENERGY
LY BY INPUT FUSE. DO NOT
OUT LINE ISOLATION FOR
IPMENT. FAILURE TO OBSERVE
EVERE INJURY OR DEATH.

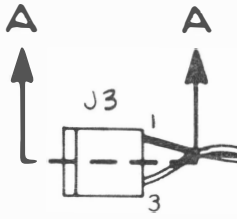

SECTION
A-A

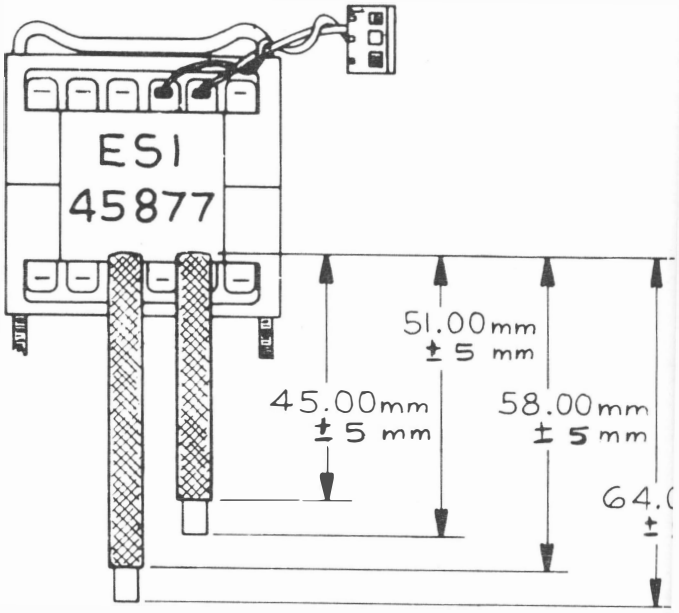

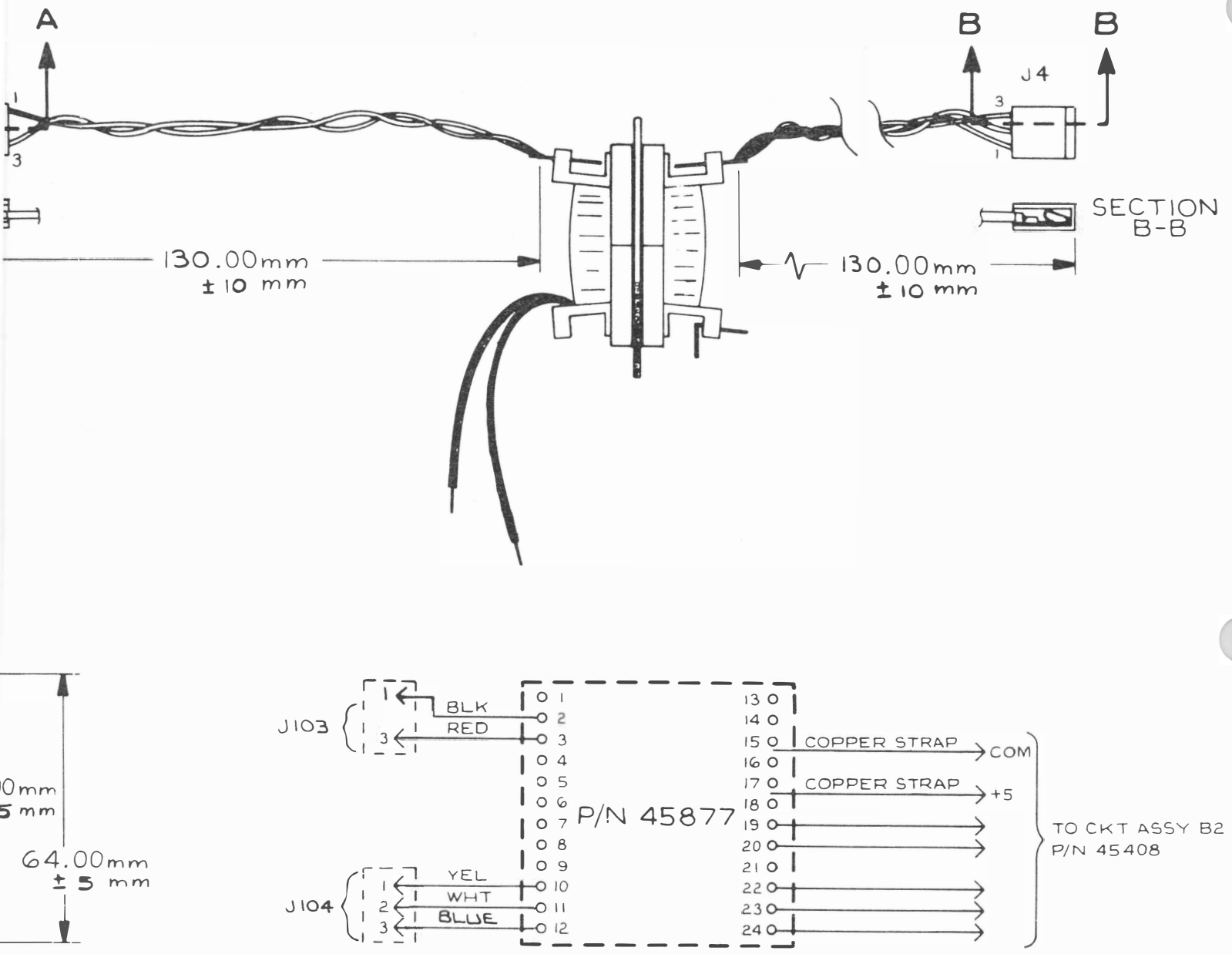

T1 DETAIL

Figure 5-9. Power Supply B2 Circuit Assembly (P/N 45488) (cont)

5.7.3 Motherboard-to-Power Supply Interconnect Cable Assembly (P/N 47111)

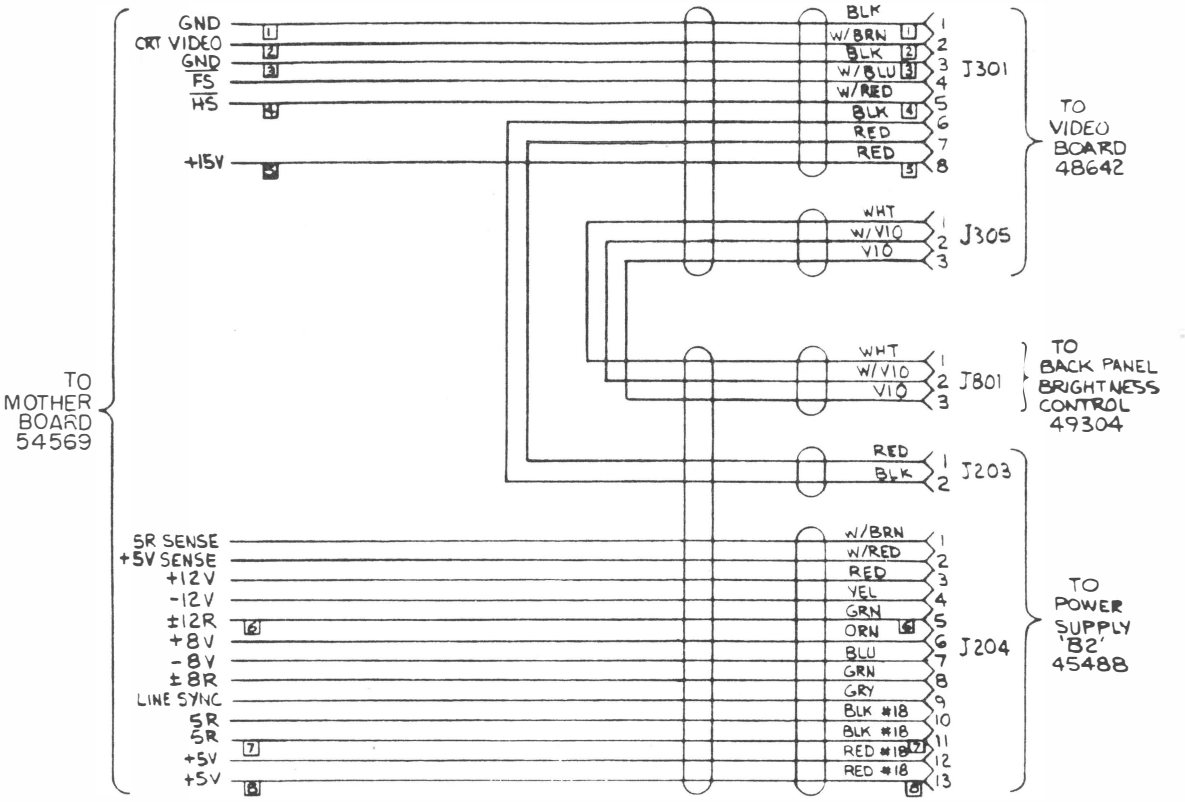

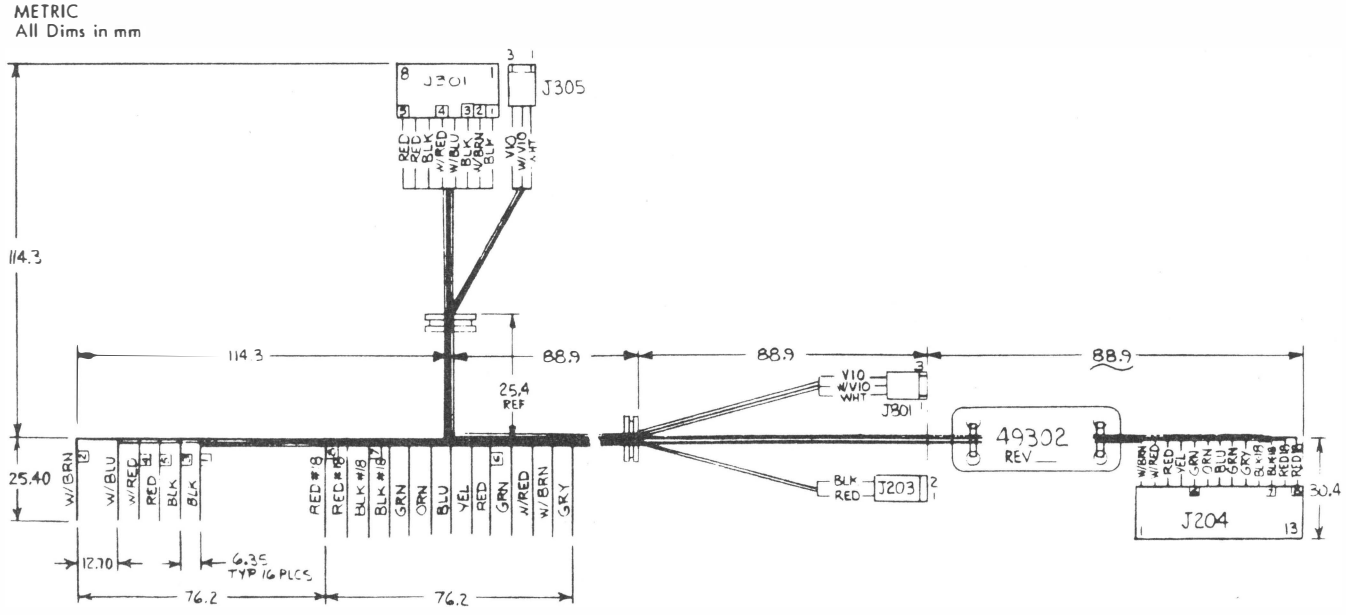

Figure 5-10. Motherboard-to-Power Supply Interconnect Cable Assembly (P/N 47111)

5.7.4 Back Panel-to-Power Supply Cable Assembly (P/N 47115)

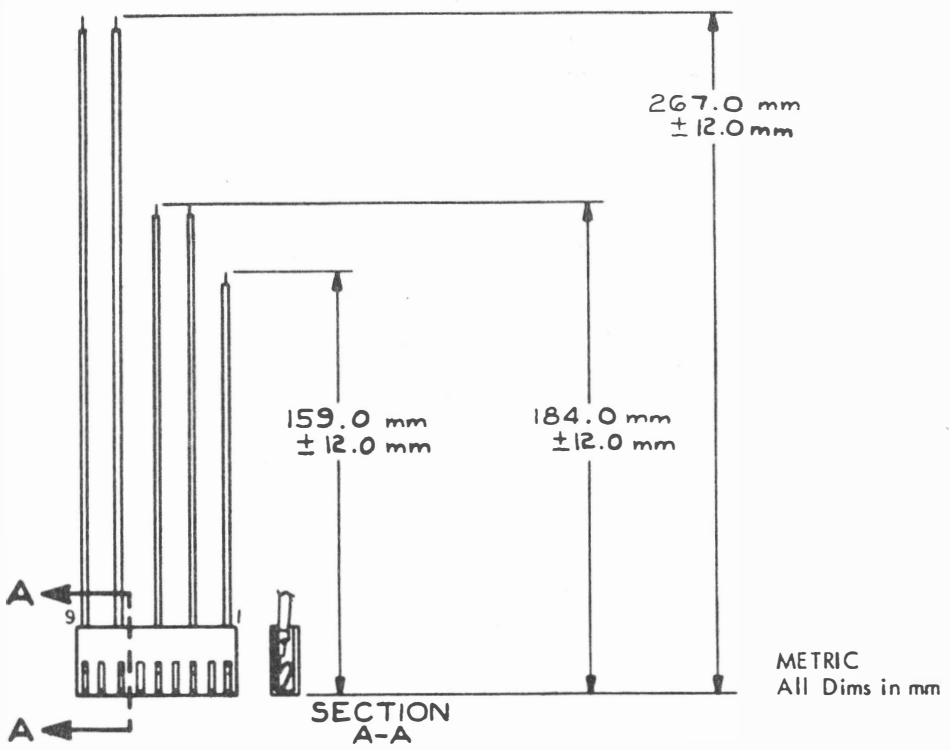

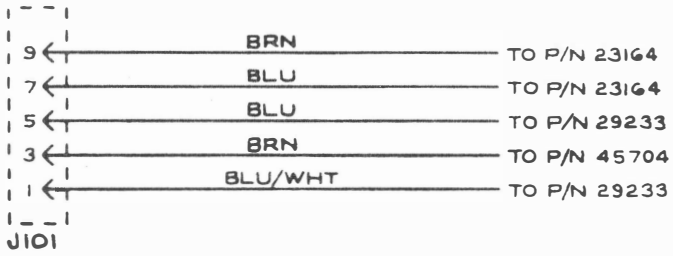

Figure 5-11. Back Panel-to-Power Supply Cable Assembly (P/N 47115)

5.8 RS-232/CASSETTE INTERFACE CIRCUIT ASSEMBLY (P/N 52674)

CIRCUIT NO.	DESCRIPTION	ESI PART NO.
	PC BOARD, RS-232/CASSETTE INTERFACE	52673
C1-C11	CAPACITOR, 0.01 microfarad, 50V, 20%	45658
J701	CONNECTOR, DB255	45983
R1	RESISTOR, 1 kilohm, 1/4W, 10%	13920
R2	RESISTOR, 15 megohm, 1/4W, 20%	13976
R3	RESISTOR, 6.8 kilohm, 1/4W,10%	13930
S1,S2	SWITCH, 10 POSITION DIP	52711
	BRACKET, RS-232	45815
	BRACKET, GROUND	45951
UR1,UR2	RESISTOR, SIP, SR, 2.2 kilohm	45847
U1	IC, 74LS00	52760
U2	IC, 74LS32	52582
U3	IC, 8131	45527
U5	IC, 74LS139	45656
U6,U11	IC, 8304	45262
U8	IC, 3882N-4	49183
U9	IC, 74LS74	52761
U10	IC, 74LS86	52762
U12	IC, 74LS174	43681
U13	IC, 3884N-4,Z80-SIO	49184
U14	IC, MC 14411	42933
U15	IC, MC 1488L	42301
U16	IC, MC 1489L	42302
Y1	CRYSTAL, 1.8432MHz, 0.05%	45974
	SOCKET, 14 PIN DIP	19189
	SOCKET, 16 PIN DIP	20860
	SOCKET, 40 PIN DIP	41342
	SOCKET, 24 PIN DIP	41492
	SOCKET, 20 PIN DIP	45660
	SOCKET, 28 PIN DIP	43844

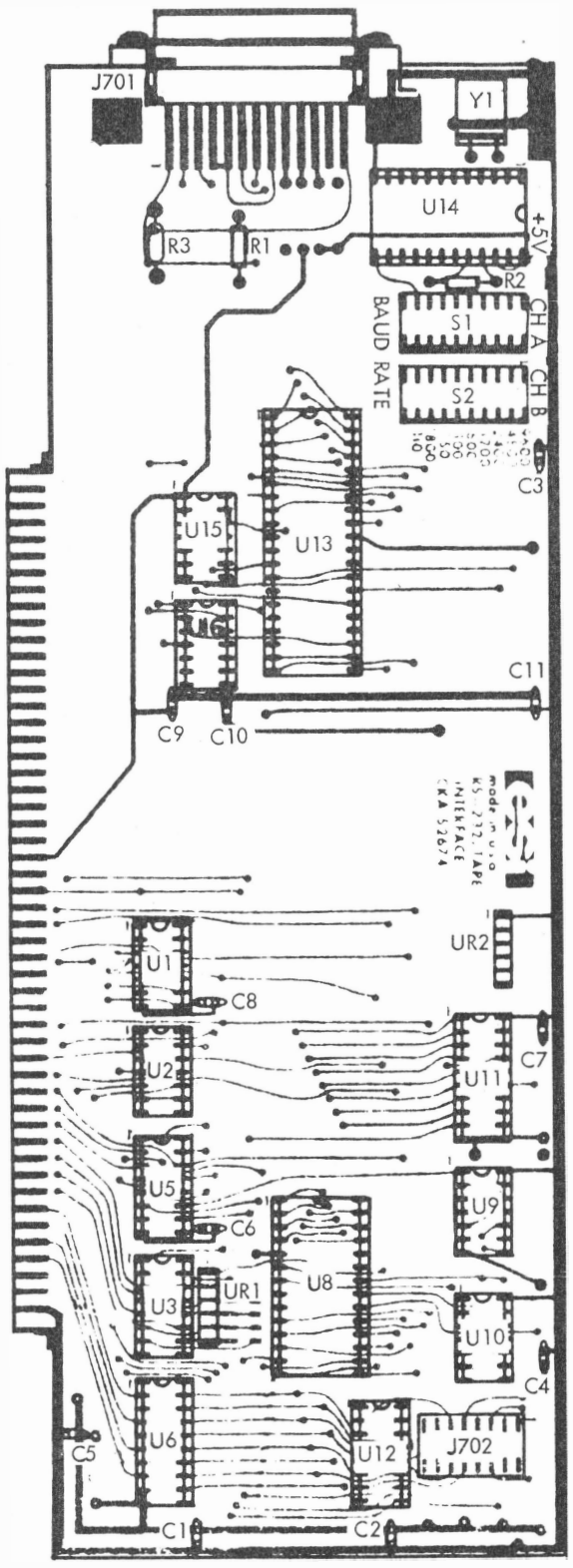

Figure 5-12. RS-232/Cassette Interface (optional on 2150) Circuit Assembly (P/N 52674)

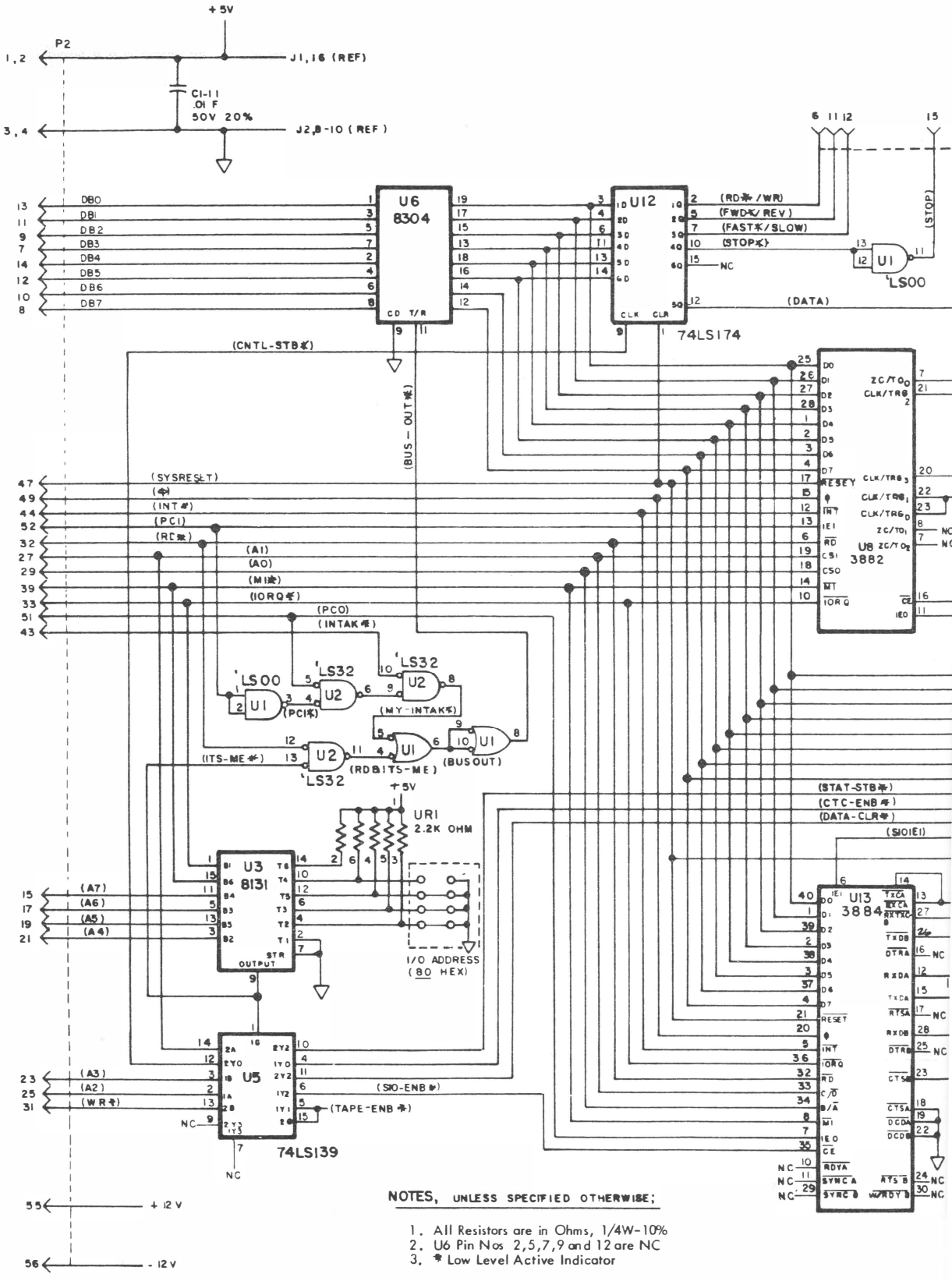

NOTES, UNLESS SPECIFIED OTHERWISE;

1. All Resistors are in Ohms, 1/4W-10%
2. U6 Pin Nos 2,5,7,9 and 12 are NC
3. * Low Level Active Indicator

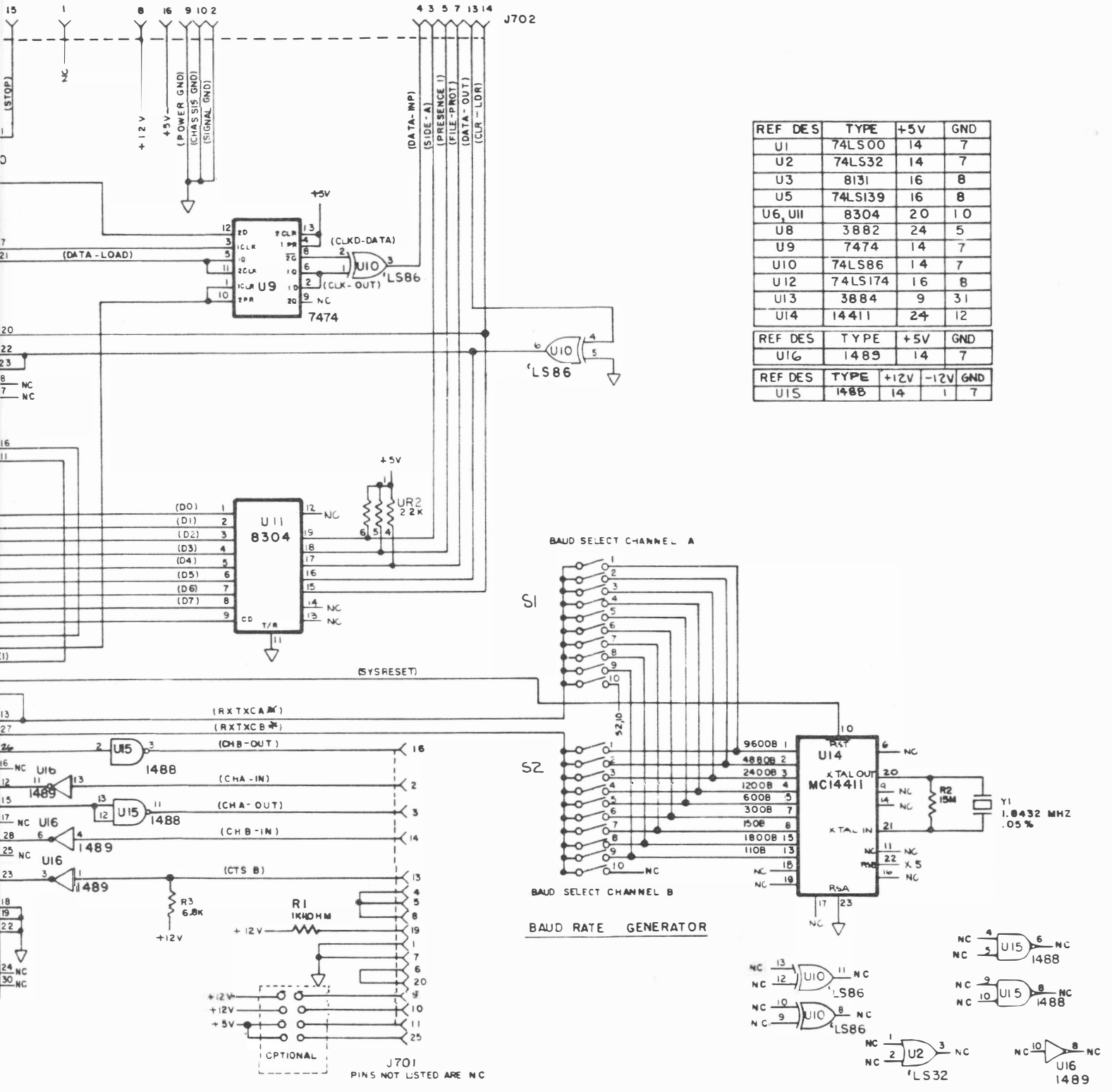

REF DES	TYPE	+5V	GND
U1	74LS00	14	7
U2	74LS32	14	7
U3	8131	16	8
U5	74LS139	16	8
U6, U11	8304	20	10
U8	3882	24	5
U9	7474	14	7
U10	74LS86	14	7
U12	74LS174	16	8
U13	3884	9	31
U14	14411	24	12

REF DES	TYPE	+5V	GND
U16	1489	14	7

REF DES	TYPE	+12V	-12V	GND
U15	1488	14	1	7

Figure 5-12. RS-232/Cassette Interface (optional on 2150) Circuit Assembly (P/N 52674) (cont)

APPENDIX A
OPTIONS OPERATION

A.1 MODEL 2150/2160 HANDLER INTERFACE OPTION

Handler Interface options enable the Model 2150/2160 to operate with a mechanical parts handler. The option accepts a START signal to initiate measurements, provides a BUSY signal which may be used to arrest handler operation during test, and offers a contact closure output corresponding to one of thirteen preselected component bins (refer to Section 2.7 for component sorting operation). Additionally, an End of Conversion signal can be enabled which allows calculations during handler movement. However, one less accept bin is available in this mode (see Table 2-1, test code 16).

Three standard handler interface options are available. They are:

ESI Part No. 47895 -- "General", for interfacing the Engineered Automation, Ismeca, Q-Corp, Heller, Systemation and other handlers.

ESI Part No. 47896 -- "Daymarc", for interfacing the Daymarc handlers.

ESI Part No. 47897 -- "MCT Browne", for interfacing MCT Browne handlers.

NOTE: Circuit differences between options are depicted in the schematic section (Appendix B) as follows:

"General" (Figure B-1)--U7 is a TIL119 Opto-Isolator (P/N 44224). W3 is connected to pin 6 of U6.

"Daymarc" (Figure B-3)--U7 is a 4N28 Opto-Isolator (P/N 20674). W3 is connected to pin 6 of U6.

"MCT Browne" (Figure B-2)--U7 is a 4N28 Opto-Isolator(P/N 20674). W3 is connected to pin 5 of U6.

Contact the factory for information concerning the use of other part handlers with the Model 2150 or 2160.

A.1.1 Hardware Included

Handler Interface Option 47895
    Handler Interface Circuit Assembly
    Instruction Sheet

Handler Interface Option 47896
    Handler Interface Circuit Assembly
    Instruction Sheet

Handler Interface Option 47897
    Handler Interface Circuit Assembly
    Instruction Sheet

A.1.2 Installation

WARNING

TO AVOID PERSONAL INJURY FROM ELECTRIC SHOCK DO NOT REMOVE INSTRUMENT COVERS OR PERFORM ANY MAINTENANCE OTHER THAN DESCRIBED IN THIS MANUAL. INSTALLATION AND MAINTENANCE PROCEDURES DESCRIBED IN THIS MANUAL ARE TO BE PERFORMED BY QUALIFIED SERVICE PERSONNEL ONLY.

CAUTION

TO AVOID DAMAGE TO CIRCUITRY, TURN POWER OFF WHILE PLUGGING IN OR REMOVING CIRCUIT ASSEMBLIES.

Remove strap from unused card slots on the motherboard. Insert the Handler Interface Assembly into slot J4 ONLY (see Figure A-1). Replace strap across J1-J3. Installation of the BNC-to-BNC cables and the Handler Interface cable assembly, for option part number 47895, are dependent upon the component handler being used. The BNC cables connect the VideoBridge HI and LO unknown terminals to the part handler's component contactors. The Handler Interface Cables make all logic connections between the VideoBridge rear panel OUTPUTS connector and the component handler.

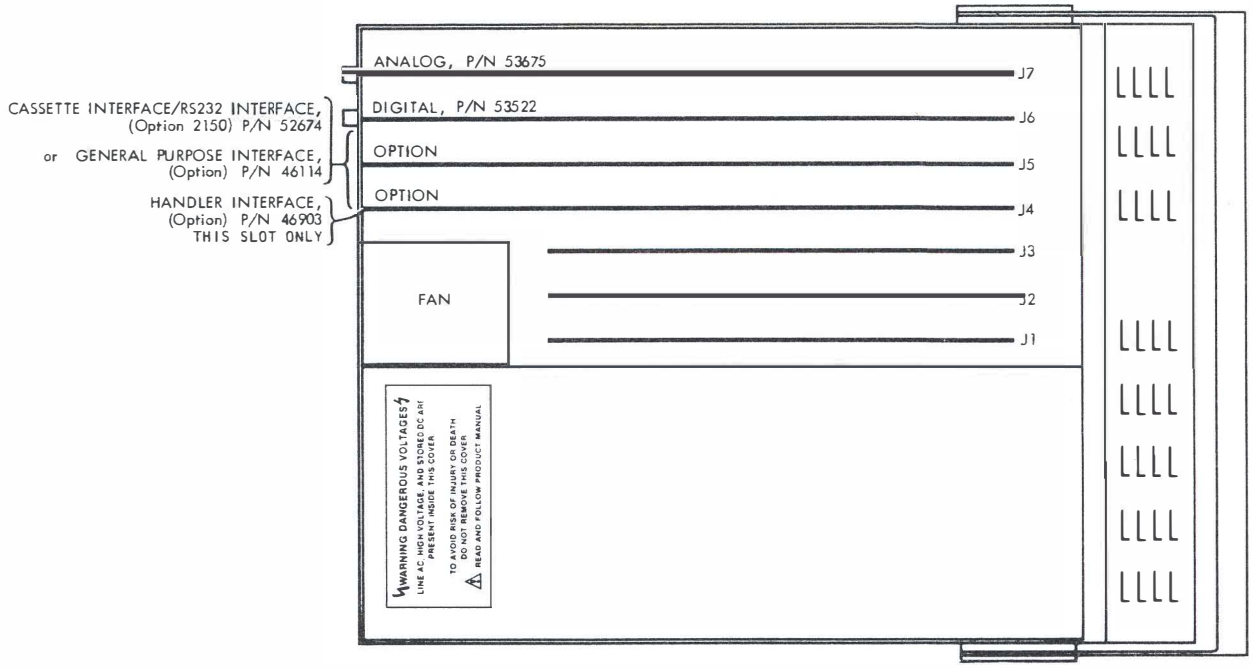

Figure A-1. Handler Interface Circuit Assembly Location

A.1.3 Operation

Before installing the Handler Interface option, set the desired bin limits along with the nominal value and enter test code 8 or -8. This puts the VideoBridge into SINGLE measurement mode. Component sorting begins immediately upon receipt of START pulses from the handler.

The Handler Interface Option can only be used with test code 8 (handler mode without display) or test code -8 (with display). Refer to Section 2.7 for more information on SORT mode and test codes 8 and -8.

To deactivate either test code, do one of the following:

1. Temporarily ground Pin 21 of the Handler Interface rear panel connector. Grounding is accomplished by connecting Pin 21 to Pin 13 (System Ground) on the same connector.

2. Turn instrument power OFF then ON again. In this case, the nominal value, bin limits, and bin counters are zeroed (unless the Non-Volatile Memory option is present and has been enabled). See Section A.3.

The Handler Interface provides the following functions:

NOTE: Indicated polarity must be observed for each function.

1. START TEST -- is the active HIGH input to an opto-isolator. To initiate a measurement, it requires a holding current of 20mA to 70mA for a minimum of 10ms.

2. BUSY -- is the active HIGH, open collector output of an opto-isolator. This signal is used to arrest handler operation during test and can be changed to active LOW by moving jumper W3 on the Handler Interface Circuit Card. The opto-isolator for Browne and Daymarc handlers (TIL119) can sink a maximum current of 125mA and has a continuous power dissipation rating of 150mW. The opto-isolator for the General handler (4N28) can sink a maximum current of 3mA.

3. END OF CONVERSION (ANALOG BUSY) -- is the active LOW relay closure from common to the output of BIN 11 (see Figure B-1.) This signal allows the handler to advance to the next component for testing while calculations are still being made on the previous device under test. The EOC capability is enabled by programming test code 16 and cleared by test code -16.

4. Output Relays -- are active LOW contact closures which select bins according to preset limits (see Section 2.7, Component Sorting). One relay is closed at a time. The relays are rated at 100VDC, 250mA switching current, and 10 million operations. Higher currents may cause a possible reduction in operation life, especially if contacts arc on opening. Resistive loads are more desirable than inductive loads. Relay switching may take 3-4ms.

5. 5V TTL (open collector) Outputs -- are available at the rear panel OUTPUTS connector (active HIGH). They require the addition of a jumper wire in place of each output relay.

Programming 8 CODE (handler mode without display) is recommended for fastest handler interface operation. -8 CODE is slower but displays results: the BUSY signal is extended approximately 110ms for display update time before the next START signal will be recognized.

In addition, test code 10 can be used in conjunction with either test code 8 or -8 for remote output to channel B of the RS-232C Interface option. This also extends the BUSY signal approximately 110ms before the next START signal will be recognized (for a total of approximately 220ms in test code -8).

The Handler Interface times listed under Figure A-2 were determined under these test conditions (other setups may affect times):

Test Frequency = 1kHz	Test Signal = 1000mV
Settling Time = 2ms	Integration Time = 2ms
Number of Averages = 1	Baud Rate = 9600
RANGE HOLD	Value of component-under-test = 1nF
FAST	

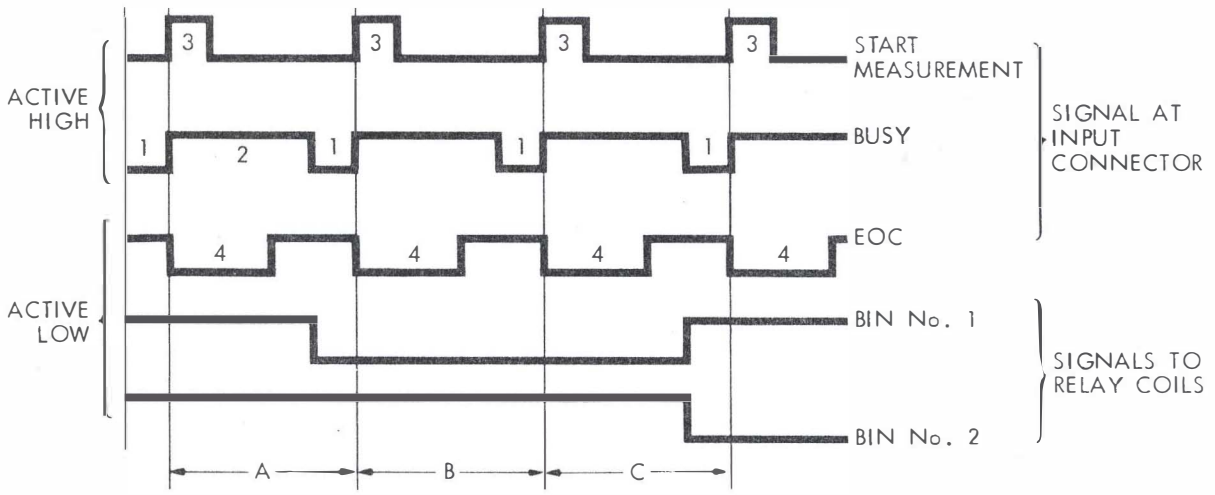

A. First part was in bin No. 1 (low signal to relay coil).

B. Second part was also in bin No. 1 (low signal to relay coil).

C. Third part was in bin No. 2 (low signal to relay coil).

Figure A-2. Handler Interface Option Signal Timing

NOTE: Numbered intervals in this diagram vary with each handler interface configuration and are not depicted proportionally. All times listed are approximate and may vary by 5ms (except Interval 3, which is always a minimum of 10ms).

NOTE: When using 10 CODE for printer output, a CTS (Clear To Send) signal may add more time to Interval 1. To assure proper coordination of signals, adequate time must always be allowed in this interval before sending a START signal.

Interval 1. Time from offset of BUSY to onset of START. No minimum (dependent upon handler speed; can be less than 1ms).

Interval 2. Measurement Time. Time from onset of BUSY to offset of BUSY. Refer to instrument test conditions as noted.

8 CODE -- approximately 100ms.
8 CODE and 10 CODE -- approximately 290ms.
-8 CODE -- approximately 290ms.
-8 CODE and 10 CODE -- approximately 400ms.

Interval 3. Time from onset of START to offset of START, minimum 10ms for all four test code combinations. Measurement is initiated on the HIGH level of the START signal. Bin decisions are not made until after START goes LOW.

Interval 4. Time from onset of EOC to offset of EOC (active LOW). Approximately 40ms for all four test code combinations.

All Handler Interface outputs are available via the VideoBridge rear panel OUTPUTS connector. Table A-1 lists the functions for each pin of the OUTPUTS connector.

Table A-1. VideoBridge OUTPUTS Connector Wiring

PIN NUMBER	FUNCTION
1	COMMON
2	BIN 0
3	BIN 1
4	BIN 2
5	BIN 3
6	BIN 4
7	BIN 5
8	BIN 6
9	BIN 7
10	BIN 8
11	BIN 9
16	BIN 10
17	BIN R
15	BIN 11 (EOC)
12*	+5V (SYSTEM) OUT
13*	SYSTEM GROUND
14	START IN
18	BUSY OUT
19	BUSY COM
20	START COM
21	KEYBOARD UNLOCK

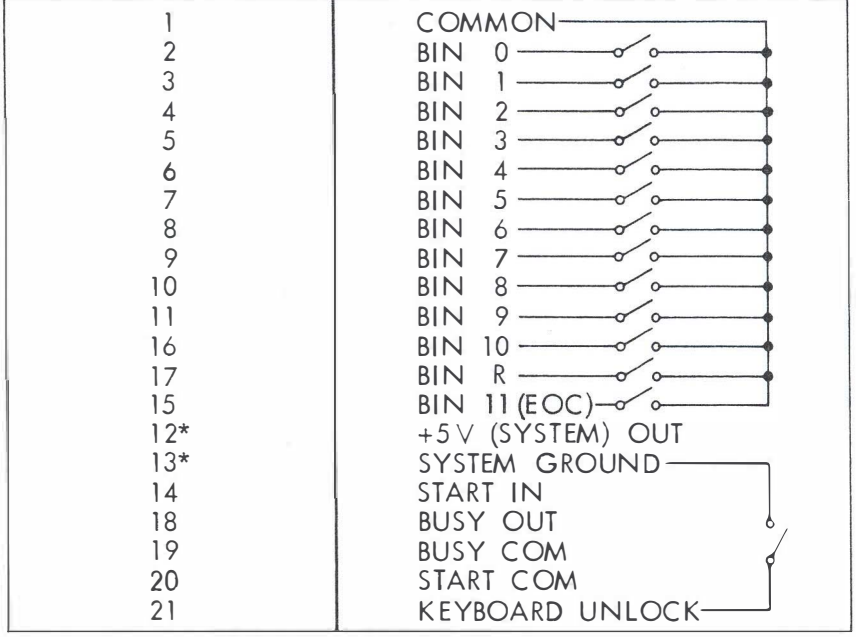

*ESI recommends that Pin 12 (+5V OUT) and Pin 13 (SYSTEM GROUND) not be used. Noise introduced into the Model 2150/2160 through these connections may affect measurements results.

NOTE: Pin 17 is Bin R which is the Reject Bin. Do not use 16 CODE to enable EOC (pin 15) unless Bin 11 limits have been set to zero.

NOTE: The Handler Interface cabling used with ESI's Model 296, 296V and 410 will not be compatible with the Model 2150/2160's connections since pin 21 is not connected in the Model 296 cable. Contact ESI factory for further details.

START COM/BUSY COM

The Handler Interface Option is shipped with the START COM (pin 20) and BUSY COM (pin 19) lines tied to the COMMON (pin 1) side of the relay closures. START COM and BUSY COM may be disconnected from relay COMMON (pin 1) and connected to SYSTEM GROUND (pin 13), if the binning operation requires relay COMMON (Pin 1) be raised above ground potential. The following procedure tells how to do this:

STEP 1. Turn instrument power OFF and remove its cover.

STEP 2. Remove the circuit card hold-downs and the Handler Interface circuit card.

STEP 3. Locate and cut the connecting stripes labeled W4 and W5 (see Figure A-3).

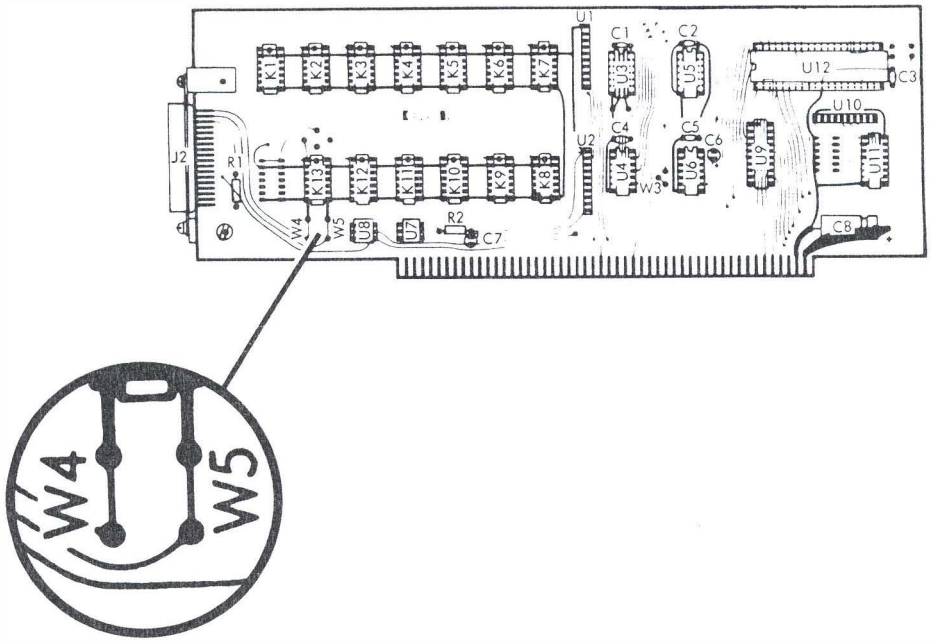

Figure A-3. Handler Interface Circuit Card

STEP 4. Add jumper wires to the rear panel connector (J2) of the Handler Interface Card. Connect START COM (pin 20) and BUSY COM (pin 19) to SYSTEM GROUND (pin 13).

STEP 5. Re-install the Handler Interface circuit card and instrument cover.

> **NOTE:** ESI recommends that Pin 12 (+5V OUT) and Pin 13 (SYSTEM GROUND) not be used. Noise introduced into the Model 2150/2160 through these connections may affect measurement results.

Connections to the Handler Interface Option should be made with a 36 contact receptacle that has a trapizoidal, polarized shell. Use Amphenol P/N 57-40360 or ESI P/N 15738.

A.1.4. Calibration

The VideoBridge needs no adjustment, other than normal calibration, when a Handler Interface Option is installed. The Handler Interface Assembly contains no service adjustments.

A.2 MODEL 2150/2160 REMOTE PROGRAMMING OPTIONS (GPIB AND RS-232C)

A.2.1 Introduction

The Model 2150/2160 VideoBridge can be fitted with General Purpose Interface Bus (GPIB) or RS-232C remote programming capabilities. Sections A.2.2 to A.2.8 describe the GPIB option. Sections A.2.9 to A.2.14 describe the RS-232C option.

Information from both remote devices is seen as the same by the VideoBridge. Section A.2.16 lists instrument setup common to both GPIB and RS-232C options.

The GPIB option (P/N 46725) allows the VideoBridge to communicate on the bus structure defined by IEEE 488-1978 specifications (see ANSI IEEE Standard Digital Interface for Programmable Instrumentation.) The bus itself is a passive structure. It is the active components on the interface option that enable the 2150/2160 to operate according to this universal standard. With the GPIB option installed, the 2150/2160 can be connected directly to the bus, and operated by a controller and the appropriate programming instructions. The instructions to and the data generated by the instrument are coded in ASCII code.

The RS-232C Interface option (P/N 46724) is used to interface the 2150/2160 VideoBridge to peripheral equipment; i.e. video display terminals, keyboards, printers, etc. With this option installed, the 2150/2160 can interface with RS-232C systems.

A.2.2 GPIB Bus Structure and Supported Interface Functions

The IEEE-488 bus is a set of sixteen signal lines that can be grouped functionally into three specifically dedicated buses.

1. 8 bidirectional data lines -- DIO 1 through DIO 8.
2. 3 interface signal lines -- DAV, NRFD, and NDAC
3. 5 general management lines -- ATN, EOI, IFC, REN, and SRQ.

Information is transferred along the bus in bit-parallel, byte-serial fashion by an asynchronous handshake. The handshake signals (interface signals DAV, NRFD, NDAC) guarantee the transfer of each byte of data from an addressed talker to all addressed listeners. This allows instruments with different data transfer rates to operate together on the bus as long as they conform to the handshake state diagrams defined in the IEEE standard.

Instruments connected to the bus are classified as either talkers, listeners, or controllers. A talker is capable of transmitting data on the data lines; there can be only one talker at a time to avoid confusion in message and data transfer. A listener is capable of responding to data received on the data lines; there can be more than one listener at a time. A controller designates which devices are to talk or listen and exercise other bus management functions. There can be a system controller as well as other controllers on the bus. However, there can be only one controller-in-charge at a time.

A device need not always be a talker or listener or controller, it may be idle part of the time. An instrument may alternate as a talker and a listener depending on whether it is generating data or receiving instructions. Figure A-4 is a typical system based on the IEEE-488 bus structure.

Table A-2 lists the IEEE-488 Interface Function repertoire including the subsets of each function supported by the VideoBridge. The ANSI/IEEE standard describes these functions in more detail.

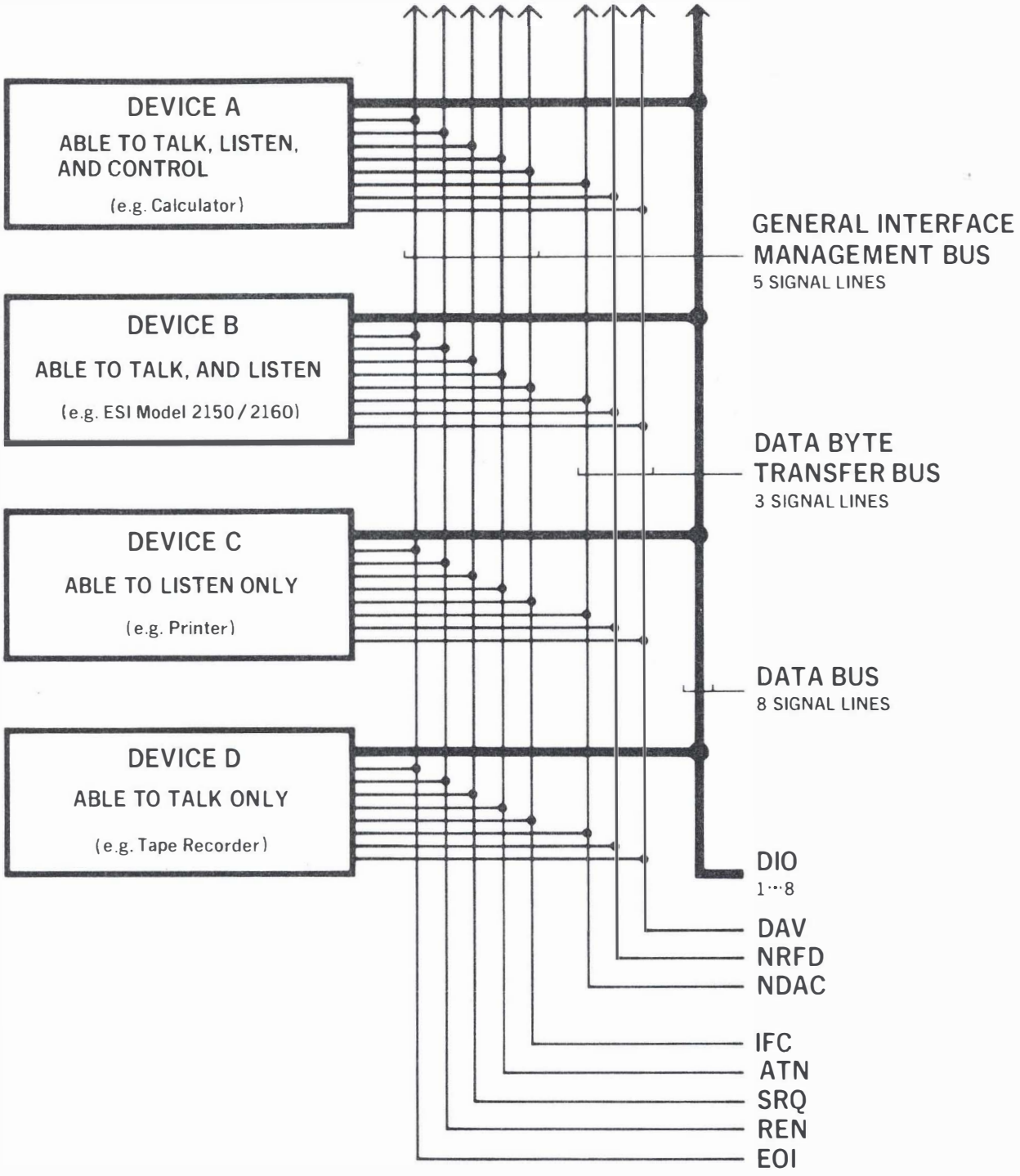

Figure A-4. A Typical IEEE-488 Bus Based System

Table A-2. IEEE-488 Interface Functions Supported by Model 2150/2160

SH1	Source handshake -- complete capability
AH1	Acceptor handshake -- complete capability
T2	Talker -- Basic Talker, Serial Poll capabilities
TEØ	Extended Talker -- no capability
L2	Listener -- Basic Listener capability
LEØ	Extended Listener -- no capability
SR1	Service Request -- complete capability
RLØ	Remote Local -- no capability
PPØ	Parallel Poll -- no capability
DCØ	Device Clear -- no capability
DT1	Device Trigger -- complete capability
CØ	Controller -- no capability

NOTE: Device Trigger capability (DT1) means the Group Execute Trigger (GET) interface message can be used by the controller-in-charge to start instrument operation. For more information on this or any other Interface Function, refer to the ANSI/IEEE Std 488-1978.

A.2.3 Number of Devices

The IEEE-488 bus can handle up to 15 devices. More than 15 devices can be interfaced if they are not directly connected to the bus but are interfaced through another device. At least two-thirds of the main devices connected to the bus at any time must be powered up for the system to be operational.

A.2.4 Cable Length

The maximum cable length that can be used to connect a group of devices within one bus system is:

2 meters times the number of devices, or 20 meters, whichever is less.

Cables may be interconnected in either star or linear configuration, or in any combination of the two methods (see Figure A-5).

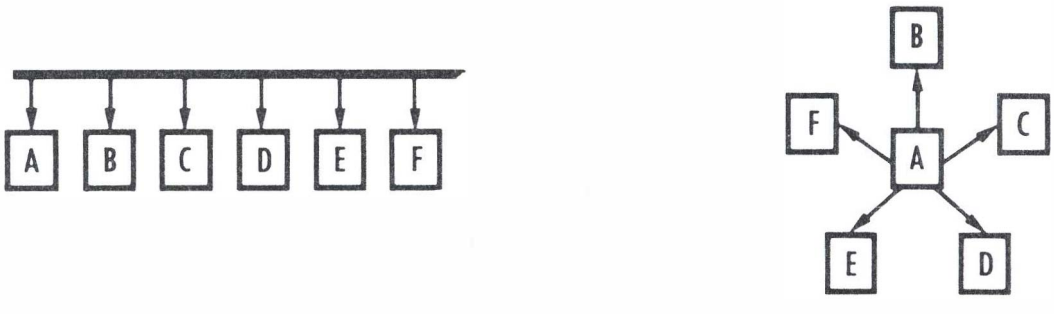

Figure A-5. IEEE-488 Bus Interconnection Configurations

A.2.5 Electrical Specifications

The relationship between the binary logic states and their voltage levels is as follows:

LOGIC STATE	VOLTAGE LEVEL	
0	$\geq$ +2.0V	High is inactive state
1	$\leq$ +0.8V	Low is active state

The high and low electrical states are based on standard TTL (transistor-transistor logic) levels where the power source does not exceed +5.25VDC and is referenced to logic ground.

A.2.6 Signal Lines

The IEEE-488 bus is divided by function into three separate busses as shown in Figure A-4: an eight-line data bus, a three-line transfer bus, and a five-line management bus. Table A-3 indicates the contacts corresponding to these lines as well as the seven signal ground returns and the bus shield.

The data bus (signal lines DIO 1 through DIO 8) are used to convey data or device-dependent messages. DIO 1 represents the least significant bit in the transmitted byte; DIO 8 represents the most significant bit. One eight-bit word can be transmitted bidirectionally in byte-serial, bit parallel fashion. The data lines are considered active when their signal level is low.

The transfer bus is a three-wire handshake process that is executed between the talker and all designated listeners each time a byte is transferred over the data bus. This handshake process assures that new data is not placed on the data bus faster than the slowest listener can receive it. The three transfer bus lines and their functions are:

NRFD (Not Ready For Data) -- This signal line is low until all addressed listeners are ready to receive the next data byte. When all addressed listeners are ready, they release the NRFD line, the NRFD signal goes high, allowing the talker to place the next byte on the data line.

DAV (Data Valid) -- The DAV signal line is set low by the talker a short time after placing a valid byte on the data lines. This signal tells each listener to capture the byte presently on the data lines. DAV can not be set low until the NRFD signal goes high.

NDAC (Not Data Accepted) -- The NDAC signal line is set low by each addressed listener until they all have captured the byte currently on the data lines. When all listeners have captured the data byte, the NDAC signal goes high. With the NDAC signal high, the talker is able to remove the byte from the data lines and at that point set the DAV line high until the handshake cycle is repeated.

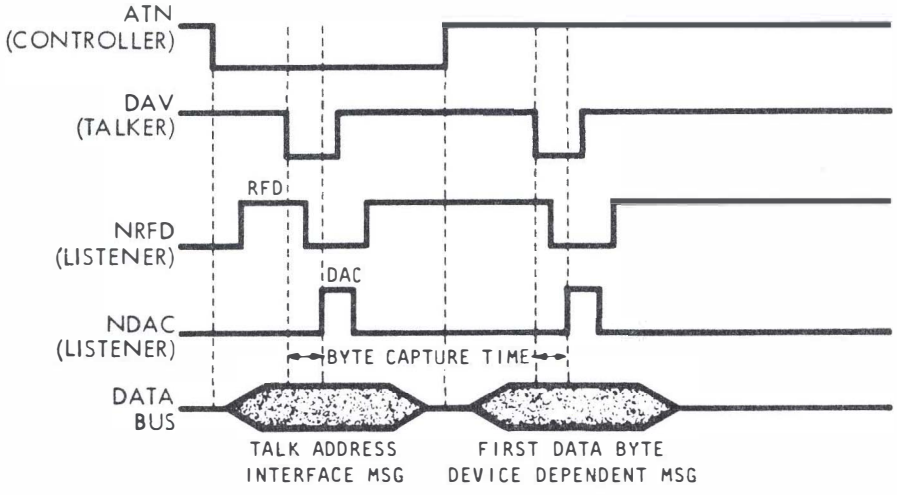

Figure A-6. A Typical Handshake Cycle

The group of signal lines used to control the orderly flow of information across the IEEE-488 data bus is called the management bus. These signal lines perform such important tasks as detecting interrupts, setting a device to remote control, and announcing the end of a message. The five management bus signals are:

ATN (Attention) -- The controller-in-charge uses this signal to specify how data on the bus are to be interpreted. It also specifies which devices along the bus must respond to the data. When ATN is set low, the data bus will convey addressed commands, universal commands, listen addresses (MLA), talk addresses (MTA), or secondary addresses. The codes corresponding to these commands and addresses are defined in Appendix E of the IEEE-488 standard.

SRQ (Service Request) -- The controller-in-charge receives this signal set low by a device requesting service. The controller conducts a poll to determine which device on the data bus activated the interrupt. The controller can take the appropriate action by branching to an interrupt service routine.

EOI (End Or Identify) -- The EOI line is set low to indicate the end of a multiple byte transfer sequence. The controller-in-charge executes a parallel polling sequence when the EOI and the ATN lines are set low simultaneously. The VideoBridge does not support the parallel polling mode.

IFC (Interface Clear) -- The system controller sets this signal low to initialize the interface functions of all devices connected to the data bus, i.e., set them to an inactive state, then return control to the system controller.

REN (Remote Enable) -- The system controller sets this line low to activate the remote mode, disabling front panels of instruments on the bus. This management line is not supported by the VideoBridge, so its state will be ignored.

A.2.7 Bus Connector

Instruments that connect to the IEEE-488 bus use a 24 contact, trapizoidal, polarized shell connector. The contact assignments for the connector are shown in Table A-3.

Table A-3. IEEE-488 Bus Connector Contact Assignments

CONTACT	SIGNAL LINE	CONTACT	SIGNAL LINE
1	DIO 1	13	DIO 5
2	DIO 2	14	DIO 6
3	DIO 3	15	DIO 7
4	DIO 4	16	DIO 8
5	EOI	17	REN
6	DAV	18	Gnd (6)
7	NRFD	19	Gnd (7)
8	NDAC	20	Gnd (8)
9	IFC	21	Gnd (9)
10	SRQ	22	Gnd (10)
11	ATN	23	Gnd (11)
12	SHIELD	24	Gnd LOGIC

NOTE: Gnd (n) refers to the signal ground return of the referenced contact.

A.2.8 Instrument Address Selection

Bus addresses for the 2150/2160 are set via switches on the GPIB interface circuit card (see Figure A-7). Primary bus addresses can be set over the full range allowed by the IEEE-488 standard: 32 to 62 (decimal) for LISTEN addresses and 64 to 94 (decimal) for TALK addresses. However, the values of the LISTEN and TALK addresses are not independent since they share the same switch setting (see Figure A-7). The address switches are set in binary fashion. The LISTEN address is achieved by the instrument's software automatically adding 32 to the switch setting. The TALK address is achieved by adding 64 to the switch setting.

The first five switch positions, starting with the top switch position, are used to set the LISTEN and TALK addresses. A switch position is activated when its left side is down, see Figure A-7. The decimal values for the first five switch positions are: 1, 2, 4, 8, and 16. In Figure A-7, switch positions 1 and 2 are activated providing: a value of 3, a LISTEN address of 35, and a TALK address of 67.

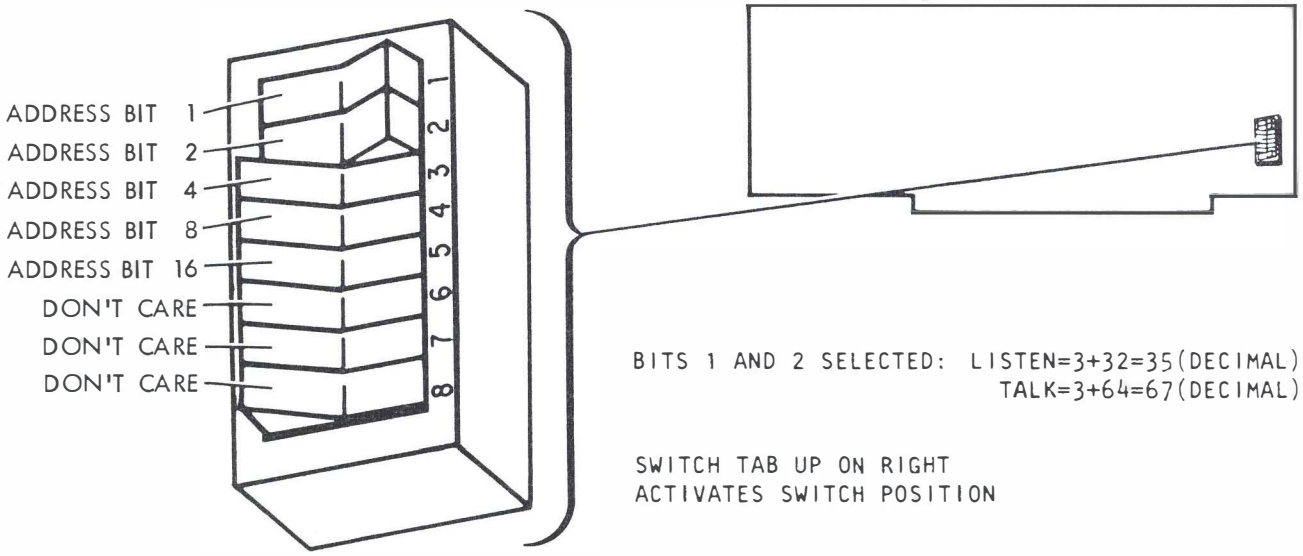

Figure A-7. GPIB Address Switches

A.2.9 RS-232C Interface (Optional on 2150/Standard on 2160)

In 1963, the Electronic Industry Association (EIA) established a standard to govern the Interface Between Data Terminal Equipment and Data Communication Equipment Employing Serial Binary Interchange. The latest revision of this standard has been in effect since 1969 and is known as RS-232C. The RS-232C standard defines electrical, logical, and mechanical specifications for the transmission of bit serial information. The VideoBridge's RS-232C option supports one bidirectional communication channel (channel B) that is used to communicate instrument setup and measurement information.

> **NOTE:** ESI supports the use of RS-232C Channel B only. Channel A is strictly an input channel and is reserved for applications programming features. Since Channel B is the secondary RS-232C channel, some VideoBridge pin connections do not conform to standard configurations. To ensure proper data transfer, consult the RS-232C standard and/or the manual of the device being connected.

A.2.9.1 Channel B

Channel B is used in two ways:

1. As a serial output for driving a printer.

2. As a means to provide remote programming. Programming instrument setups is very similar to that used on the IEEE-488 Interface Bus.

Data flowing into Channel B are put in an intermediate queue on an interrupt basis. Up to two hundred characters of input are allowed before overflow occurs. Full lines of data can be transmitted without concern about lost data.

> **NOTE:** Entries made through channel B are not echoed back for display.

The Channel B output buffer transmits data in five sections when the remote display mode is activated (by including the command REMOTEON as part of the setup program) and the measurement is completed.

1. A two digit error code.
2. Measurement from the top window of the instrument.
3. Measurement from the bottom window of the instrument.
4. Identification of top and bottom window functions.
5. Bin number.

See Section A.2.16.2 for measurement output information.

A.2.9.2 RS-232C Signal Flow

Use of the RS-232C bus requires three lines.

VIDEOBRIDGE CONNECTOR PIN Channel B	SIGNAL NAME
14	Receive Data
16	Transmit Data
7	Signal Ground

"Transmit" and "receive" are as viewed from the VideoBridge.

Figure A-8 indicates this setup when the VideoBridge is connected to a terminal or controller--the VideoBridge transmits data on pin 16 and receives data on pin 14.

Figure A-9 indicates a slightly different setup when connected to a printer: the VideoBridge still transmits data on pin 16 but receives a "Clear To Send" signal (CTS) from the printer on pin 13.

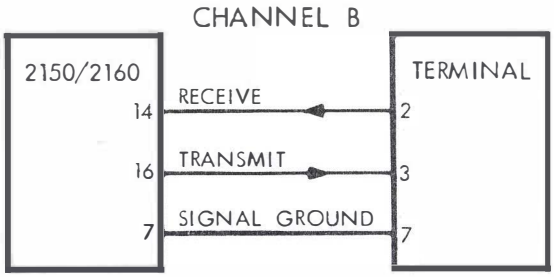

Figure A-8. RS-232C VideoBridge-to-Terminal Connections

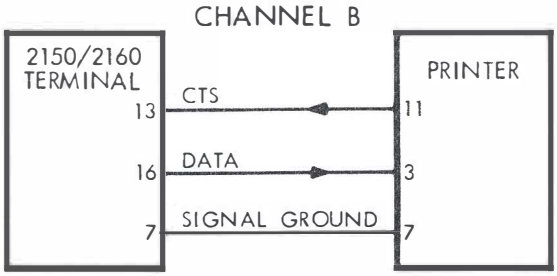

Figure A-9. RS-232C VideoBridge-to-Printer Connections

RS-232C HANDSHAKE FUNCTIONS ARE NOT SUPPORTED BY THE MODEL 2150/2160.

This is because the RS-232C handshake signal lines are internally tied together within the VideoBridge, disabling the functions.

Pin 4 -- Request to Send (RTS)
Pin 5 -- Clear to Send (CTS)
Pin 8 -- Data Carrier Detect (DCD)

are connected together.

Pin 6 -- Data Set Ready (DSR)
Pin 20 -- Data Terminal Ready (DTR)

are connected together.

A.2.10 Data Format

The VideoBridge transmits and receives RS-232C data in 8-character word lengths: 7-bit ASCII data plus one Null bit. Also included in the string are one Start bit and one Stop bit.

THERE ARE NO PARITY GENERATION OR CHECKING BITS.

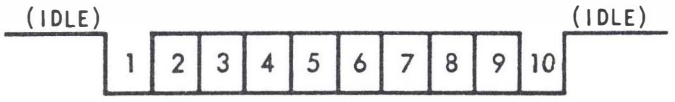

ONE START BIT (1)
SEVEN DATA BITS (2 THRU 8)
ONE NULL BIT (9)
ONE STOP BIT (10)

Figure A-10. Data Format

A.2.11 Signal Levels

Tables A-4 and A-5 show the signal levels specified by the RS-232C standard. The signal states shown in Table A-4 apply to the Receive and Transmit signals. Table A-5 applies to all control inputs.

Table A-4. RS-232C Receive and Transmit Signal Levels

NOTATION	SIGNAL STATE	
	POSITIVE	NEGATIVE
BINARY STATE SIGNAL CONDITION VOLTAGE LEVEL	1 TRUE +3V to +25V	0 FALSE -3V to -25V

Table A-5. RS-232C Control Signal Levels

NOTATION	SIGNAL STATE	
	POSITIVE	NEGATIVE
BINARY STATE SIGNAL CONDITION FUNCTION VOLTAGE LEVEL	0 SPACING ON +3V to +25V	1 MARKING OFF -3V to -25V

A.2.12 Bus Connector

Connections to the RS-232C option require a 25-contact, trapezoidal, polarized-shell connector; ESI P/N 26430, Manufacturer P/N CINCH DB-25P. "Transmit" and "receive" are as viewed from the VideoBridge. Pin assignments used by the RS-232C option are as follows:

Table A-6. RS-232C Pin Assignments

CONNECTOR PIN	SIGNAL LINE
1	Chassis Ground
2	Received Data from terminal (RS-232C IN)
3	Transmitted Data to terminal (RS-232C OUT)
4	Request to Send (Channel A)
5	Clear to Send (Channel A)
6	Data Set Ready (Channel A)
7	Signal Ground
8	Data Carrier Detect
13	Clear to Send (Channel B)
14	Receive Data (Channel B)
16	Transmit Data (Channel B)
20	Data Terminal Ready (Channel A)

A.2.13 Selecting the Baud Rate

Baud rate is equivalent to bits per second. Both communication channels of the RS-232 Interface can be switched to any one of the following nine baud rates:

1--9600	4--1200	7-- 150
2--4800	5-- 600	8--1800
3--2400	6-- 300	9-- 110

As shown in Figure A-11, there is a switch for each channel on the RS-232/Cassette Interface circuit card (P/N 52674). The corresponding switch position precedes each available rate. Position 10 on either switch is not connected. The RS-232/Cassette Interface circuit card is shipped with channels A and B switched to 9600 baud (position 1).

To select another baud rate for channel B, slide the lever on switch S2 to the appropriate number for the desired rate. For channel A, do the same on switch S1.

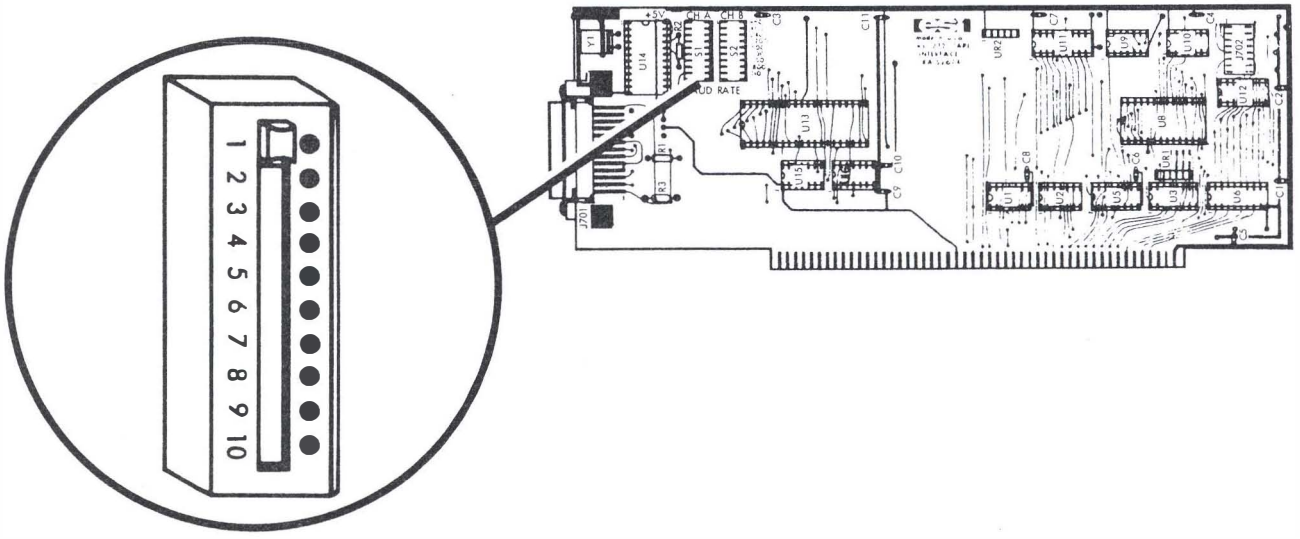

Figure A-11. Selecting the Baud Rate

A.2.14 Cable Length

Cable length for RS-232C transmission will vary according to the baud rates selected. For maximum transmission rate of 9600 baud, a cable length of less than 100 feet must be used. The capacitance of the cable must be less than 5000 picofarads. The essential parameter is the signal risetime which must be less than 1/2 the bit width so that the sampled signal will be correct.

Each time the baud rate is halved the allowable risetime doubles and the acceptable cable capacitance doubles. Therefore, 4800 baud can be transmitted over 200 feet; 2400 baud will work at 400 feet.

A.2.15 Remote Device Option Installation

TO AVOID PERSONAL INJURY FROM ELECTRIC SHOCK DO NOT REMOVE INSTRUMENT COVERS OR PERFORM ANY MAINTENANCE OTHER THAN DESCRIBED IN THIS INSTRUCTION MANUAL. INSTALLATION AND MAINTE
QUALIFIED SERVICE PERSONNEL ONLY.

TO AVOID DAMAGE TO CIRCUITRY, TURN AC POWER OFF WHILE PLUGGING IN OR REMOVING CIRCUIT CARDS.

Installation of remote device options involves plugging in the GPIB circuit card (ESI P/N 46114) or the RS-232C Interface circuit card (ESI P/N 52674).

The remote device circuit card may be plugged into either J4 or J5 (Figure A-12). J1, J2 and J3 are not used. All empty circuit card slots should be covered with the jumper wires provided.

The Model 2160 comes with RS-232C Interface capability standard. It is installed in card slot J5. Either the GPIB option or the Handler Interface option may be installed in card slot J4.

The Model 2150 can accommodate any two of the three available VideoBridge options -- Handler, GPIB, or RS-232C. The Handler card MUST be installed in card slot J4, but the GPIB and RS-232C cards may be installed in either J4 or J5.

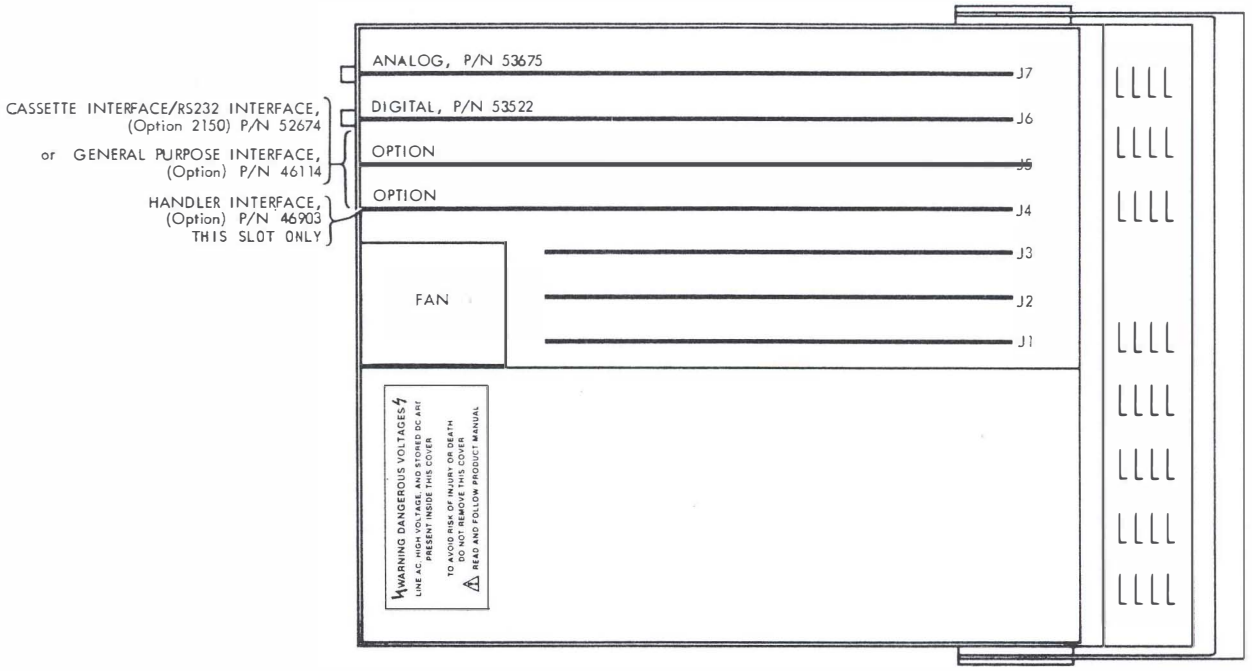

Figure A-12. Remote Device Options Circuit Card Locations

A.2.16 Remote Programming

For convenience, using the IEEE-488 bus or Channel B of the RS-232C Interface can be split into two phases: Instrument Setup and Result Accumulation.

A.2.16.1 Instrument Setup

The VideoBridge continuously checks for input from the remote device bus as it takes measurements or waits for input. If remote input is available, the instrument keyboard may be disconnected while the IEEE-488 or the RS-232C (Channel B) bus is connected as the input device. Characters are received from either bus as ASCII character strings and submitted to the 2150/2160 in the same manner as keyboard characters. In other words, transmitting the string:

5 1 BIN# <CR> <LF>

over the remote bus will be like performing the same operation at the 2150/2160 keyboard. The key to programming is that the string submitted over the remote bus must be exactly what appears on the CRT when the 2150/2160 keys are pushed (see Table A-7). For example, when the mV button is pushed, MILLIVOLTS appears on the screen in the operator communication area. It is always what appears on the VideoBridge CRT and not what appears on the keyboard which must be transmitted over the remote bus.

NOTE: Neither the CALIBRATE function nor any of the cassette tape functions via remote programming are supported by the VideoBridge. Test codes 22 and -22 are supported, but once stored zero offsets have been erased, any new ones must be entered from the VideoBridge keyboard.

NOTE: Neither messages nor data entries are displayed in the bottom portion of the CRT when input by remote programming.

Table A-7. Model 2150/2160 Remote Setup Dictionary

KEYBOARD COMMANDS	REMOTE PROGRAMMING COMMANDS	DESCRIPTION
UNIT CONTROL		
C	C	Capacitance
L	L	Inductance
Y/Z	Y/Z	Admittance (Y)/Impedance (Z)
G/R	G/R	Conductance (G)/Resistance (R)
B/X	B/X	Susceptance (B)/Reactance (X)
D	D	Dissipation factor
Q	Q	Quality factor
NUMBER SCALING CONTROL		
ap	aPICO	Pico 10^{-12}
an	aNANO	Nano 10^{-9}
au	aMICRO	Micro 10^{-6}
am	aMILLI	Milli 10^{-3}
ak	aKILO	Kilo 10^{3}
aM	aMEGA	Mega 10^{6}
MAIN CONTROL		
FAST	FAST	Set to 5 samples/measurement sequence
MED	MEDIUM	Set to detector (or generator) reversal, take normal measurement
SLOW	SLOW	Set to detector (or generator) reversal, take higher accuracy measurement
STAT	STATUS	Go to status screen
SGL	SINGLE	Take a single measurement
CONT	CONTINUOUS	Take measurements continuously
-7 CODE	-7 CODE	Simulate power-up reset
22 CODE	22 CODE	Suspend use of zero offset corrections
-22 CODE	-22 CODE	Erase all stored zero offset corrections
GENERATOR CONTROL		
aHz	aHZ	Set test frequency
amV	aMILLIVOLTS	Set test level (voltage)
amA	aMILLIAMPS	Set test level (current)
AUTO	AUTO	Auto range on
HOLD	HOLD	Range hold on (hold range of d-u-t)
an 5 CODE	aNANO 5 CODE	Set to delay range hold for anF
a bn 5 CODE	a b NANO 5 CODE	Set to delay range hold + specific tolerance for anF (see Section 2.5.3.1)

NOTE: Numerical arguments are indicated by a, b, c,... for commands requiring them.

Table A-7. Model 2150/2160 Remote Setup Dictionary (cont)

KEYBOARD COMMANDS	REMOTE PROGRAMMING COMMANDS	DESCRIPTION
GENERATOR CONTROL (cont)		
25 CODE	25 CODE	Use generator reversal if <200Hz
-25 CODE	-25 CODE	Use detector reversal
MEASUREMENT CONTROL		
aSETL	aMS-SETTLING-TIME	Set explicit settling time in ms
aI.T.	aINTEGRATION-TIME	Set explicit integration time in ms
aAVG	aSAMPLES-AVERAGED	Set explicit number of averages
DISPLAY CONTROL		
% MODE	*%MODE	Set to percent mode
ABS MODE	ABSMODE	Set to absolute mode
DEV	DEVIATION	Go to absolute/percent deviation display
DIR	DIRECT	Go to direct reading display
SORT	SORT	Go to sort mode display
26 CODE	26 CODE	Display values in SORT display on VideoBridge CRT
a 27 CODE	a 27 CODE	Set minimum digits
21 CODE	21 CODE	Go to GO/NO-GO display
17 CODE	17 CODE	Go to Auto LRC display
8 CODE	8 CODE	Go to no-display handler mode
-8 CODE	-8 CODE	Go to handler mode with values displayed
4 CODE	4 CODE	Display D in parts per million
-4 CODE	-4 CODE	Display D normally
BIN CONTROL		
aMINOR	aMINOR	Minor reject limit
a b cBIN#	a b cBIN#	Set upper and lower limits a, b on Bin c
a bBIN#	a bBIN#	Set limits of +/- a% on Bin b
aNOMINAL	aNOMINAL	Set nominal value
NOMINAL	NOMINAL	Set nominal value to current reading
2 CODE	2 CODE	Clear bin counts
-2 CODE	-2 CODE	Clear all bin limits and counts
15 CODE	15 CODE	Bin priority (bad D, low C into bin 0)
-15 CODE	-15 CODE	Bad D into bin R (normal)

NOTE: Numerical arguments are indicated by a, b, c,... for commands requiring them.

Table A-7. Model 2150/2160 Remote Setup Dictionary (cont)

KEYBOARD COMMANDS	REMOTE PROGRAMMING COMMANDS	DESCRIPTION
BIN CONTROL (cont)		
16 CODE	16 CODE	Use output of bin 11 for end of conversion (analog busy)
-16 CODE	-16 CODE	Use output of bin 11 for binning
INPUT CONTROL		
	LOCK	Lock keyboard
	UNLOCK	Unlock keyboard
9 CODE	9 CODE	Lock keyboard (except SGL key)
-9 CODE	-9 CODE	Unlock keyboard
OUTPUT CONTROL		
	SCREENON	Update values on screen
	SCREENOFF	Don't update values on screen
	REMOTEON	Output measurements to GPIB or RS-232C
	REMOTEOFF	Don't output to GPIB or RS-232C
	REMOTE[	Temporarily disconnect the keyboard and the external START switch (start of setup)
	]	Reactivate the keyboard and external START switch at the end of the setup, unless the command was part of the setup
1 CODE	1 CODE	Turn Bias On
-1 CODE	-1 CODE	Turn Bias Off
10 CODE	10 CODE	Output measurements to Channel B (RS-232C only)
-10 CODE	-10 CODE	Stop output to Channel B (RS-232C only)
11 CODE	11 CODE	Output setup and binning data Channel B (RS-232C only)
23 CODE	23 CODE	Turn off SRQ when addressed to talk (GPIB only)
-23 CODE	-23 CODE	Turn off SRQ only on serial poll (GPIB only)
24 CODE	24 CODE	Display GPIB address setting (GPIB only)
ZERO-POWER RAM (NON-VOLATILE MEMORY)		
6 CODE	6 CODE	Save all VideoBridge data into ZRAM, update bin counts
-6 CODE	-6 CODE	Retrieve data from ZRAM, begin updating bin counts

Table A-7. Model 2150/2160 Remote Setup Dictionary (cont)

KEYBOARD COMMANDS	REMOTE PROGRAMMING COMMANDS	DESCRIPTION

KEYBOARD COMMANDS NOT SUPPORTED FOR REMOTE USAGE

CODE	20 CODE
3 CODE	-20 CODE
7 CODE	LOAD
12 CODE	SAVE
13 CODE	'
14 CODE	DEL
18 CODE	ENTER
19 CODE	CAL

OUTPUT STRING FORMAT AND ERROR CODES

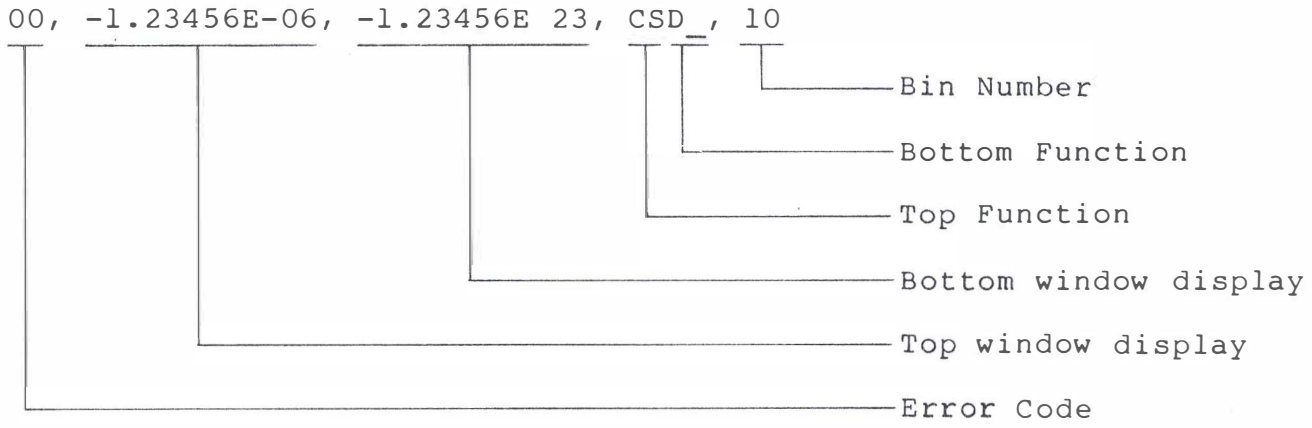

Error code assignments for 2150/2160.

00 No error
01 Can't Supply
02 Analog Error
03 Analog Error--Can't Supply
04 Calculation Error
05 Calculation Error--Can't Supply

The remote input is not echoed on the screen. Carriage returns <CR> are necessary; line feeds <LF> are optional. With the exception of "REMOTE[" and "]", multiple commands can appear on the same line.

SETUP COMMENTS

The percent sign (%) is used to separate comments from the information which is to be acted upon by the 2150/2160. Therefore, comments can be included with the setup information as shown in the example that follows.

SEPARATORS

All numbers, words, and comments in the setup strings must be separated by either SPACES, TABS, or be followed by a CARRIAGE RETURN.

LINE TERMINATION

Line feeds are accepted and discarded. A carriage return is all that is required.

UPPER AND LOWER CASE

Lower case characters are equivalent to upper case characters when naming definitions in the dictionary. When in doubt, use upper case characters. Comments can be either upper or lower case characters.

REMOTE[

REMOTE[disables the 2150/2160 keyboard and directs error messages normally appearing in the bottom reverse video line of the 2150/2160 to the remote device. It also disables the instrument from taking measurements during the setup phase. <u>It is absolutely necessary that this word appear on a line by itself!</u>

]

"]" restores the instrument to measurement mode and, if the setup didn't lock out the keyboard, re-enables the keyboard, and generally undoes any change made by REMOTE[. "]" also must appear on a line by itself!

ERRORS DURING SETUP

If one or more errors occured during the remote setup, (between "REMOTE[" and "]") the message "ERRORS SEEN" will be transmitted. If the setup went well, the string "NO ERRORS" will be transmitted. This information becomes available after the "]" is processed by the instrument.

DATA OVERFLOW

Data flowing into the RS-232C Interface option is placed in an intermediate queue, on an interrupt basis, allowing up to 200 characters of input to back-up before overflow occurs. This technique allows full lines of data to be transmitted without concern about lost data.

Data overflow temporarily suspends the bus (NRFD is activated on the GPIB option) and should be considered carefully if several instruments require prompt service. One may always construct the setup in multiple phases of less than 200 characters each and then wait for phase completion before transmission of the next phase.

SETUP CAUTIONS

During the setup phase it is convenient to issue a STATUS command so the process of bin setup is visible on the screen. Remember that when the setup is complete, STATUS must be issued again to toggle the instrument back to the chosen measurement mode. Otherwise, the SINGLE measurement commands will not result in the transmission of measurement data to the remote device.

To allow fastest setup times and also to ensure that the remote input will not be disturbed by keyboard or measurement input between successive lines of setup information, the first character output (instruction in the program) should be:

```
REMOTE[
```

which temporarily disconnects the keyboard and external START switch (i.e. do not use SINGLE or CONTINUOUS). This entry must be on a line by itself followed by a carriage return before additional input will be accepted by the 2150/2160.

The "]" character is issued at the end of the setup phase to restore the instrument to its measurement loop and make the keyboard active again. "]" automatically transmits error information. The setup program must explicitly lock the keyboard out if that is desired. This may be done with the LOCK command. After the desired measurements have been made, the instrument can be UNLOCKed.

In summary, the procedure for remote setup is:

STEP 1. Sit down with a pad of paper and write what appears on the screen as you push the keys and manually set up the instrument.

STEP 2. Insert "REMOTE[" at the start of this list of words and "]" at the end. Be sure that these two entries are each entered on a separate line apart from the other entries.

STEP 3. Write a program, in the language of the computer which will be setting up the 2150/2160, which outputs this list of words to the remote programming device.

STEP 4. AFTER THE LIST HAS BEEN TRANSMITTED, REQUEST AN OUTPUT FROM THE 2150/2160 (TAKE ONE READING WITH 'SINGLE') AND MAKE CERTAIN NO ERRORS ARE ENCOUNTERED.

Example Setup:

```
   REMOTE[
     REMOTEON            % MEASUREMENT RESULTS INTO REMOTE BUFFER
     SCREENOFF           % LOCK OUT CRT DISPLAY
     LOCK                % LOCK OUT THE KEYBOARD
     1000 HZ             % SET FREQUENCY
     FAST                % SET TO PRESET 'FAST' SPEED
     C D                 % MEASUREMENT FUNCTIONS
     SERIES              % SERIES EQUIVALENT CIRCUIT
      1  1 BIN#
      5  2 BIN#
     10  3 BIN#
     20  4 BIN#          % SET UP BIN VALUES
    100 NANO NOMINAL     % NOMINAL VALUE
  .0005 MINOR            % SET MINOR REJECT VALUE
      ]                  % END OF SETUP
     SINGLE              % REQUEST FIRST READING
```

A.2.16.2 Result Accumulation

Special Display Words

A word display is used to indicate some form of output (see Table A-7). One form is the top and bottom displays on the instrument screen--the one formed in large characters. Another is the more standard floating point numbers which are output to the remote device after it has issued a SINGLE command. The conversion of an inner floating point representation to a string of characters suitable for display takes considerable processing time. The following words were devised so the time between measurements can be as brief as possible.

SCREENON/SCREENOFF

This pair of words enables and disables the large video display on the screen of the 2150/2160. When the instrument is not being monitored on site and the measurement results are being transmitted by remote output, SCREENOFF will greatly increase measurement speed.

REMOTEON/REMOTEOFF

REMOTEON must be part of the setup information before measurement results are transmitted to the remote device which last transmitted information to the 2150/2160. The output string looks like this:

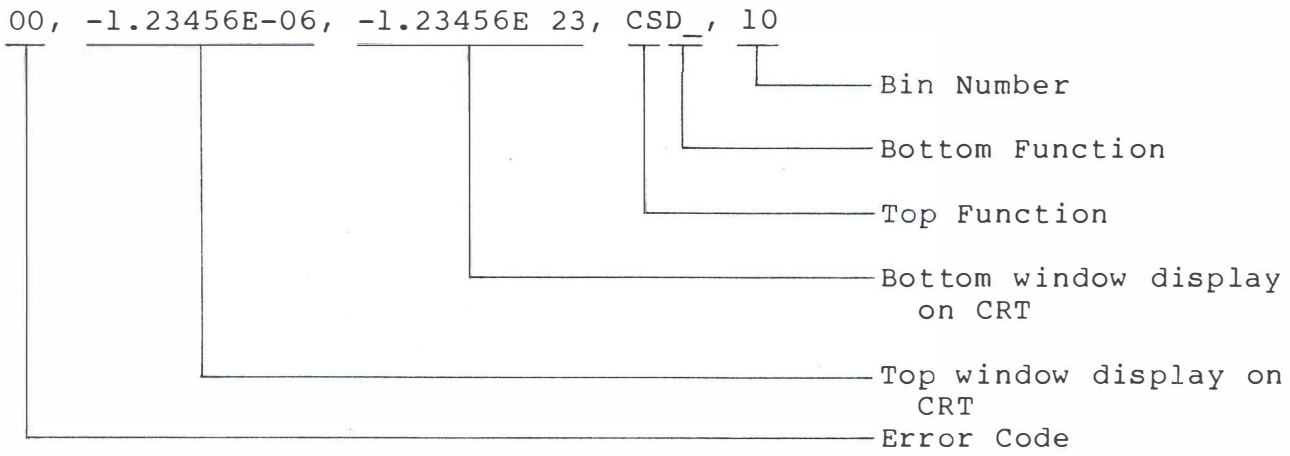

The field sizes are fixed so FORTRAN programs can use fixed field format statements to receive the input.

LOCK/UNLOCK

LOCK is issued in the setup phase to lock out the keyboard of the instrument during remote operation. UNLOCK can be issued at the termination of a run to restore control, -9 CODE can be entered, or the keyboard can be unlocked by temporarily grounding pin 21 of the Handler Interface circuit card. This overrides the remote device.

A.2.16.3 Measurement Protocol

The protocol for taking GPIB measurements is

-Controller addresses the 2150/2160 as a listener.
-Controller issues a SINGLE command.
-2150/2160 takes a measurement and stores the result in a buffer, sets the service request (SRQ) line at completion.
-Controller performs a serial poll and inputs the status byte from the 2150/2160.
-Controller addresses the 2150/2160 as a talker and reads the buffer.

Refer to Section A.2.18, GPIB Sample Program.

> **NOTE:** If the controller is unable to conduct a serial poll (which is necessary to unassert the SRQ line), enter 23 CODE. The SRQ line will now be automatically reset after the measurement results have been read by the controller. This prevents the SRQ line from remaining asserted once the VideoBridge data is no longer in the buffer.

> **NOTE:** VideoBridge protocol does not support continuous mode measurement. The controller must initiate each measurement with a SINGLE command. If continuous mode is used, the VideoBridge may write to the middle of the buffer at the same time the controller is reading the buffer.

When a serial poll is conducted, the VideoBridge returns a status byte to the controller. This byte will have one of three values:

(0) -- all bits are zero: the VideoBridge is not busy, and SRQ has not been asserted.

(1) -- the first bit is one, the rest are zero: the VideoBridge is busy, SRQ has not been asserted.

(64) -- the seventh bit is one, the rest are zero: the SRQ has been asserted. An error message will be transmitted.

If the controller does not conduct a serial poll between commanding measurements, the previous measurement will be written over.

A.2.17 Calibration

The 2150/2160 needs no adjustment, other than normal calibration, when the GPIB or the RS-232C option is installed. Neither circuit assembly contains service adjustments.

WARNING

TO AVOID PERSONAL INJURY FROM ELECTRIC SHOCK DO NOT REMOVE INSTRUMENT COVERS OR PERFORM ANY MAINTENANCE OTHER THAN DESCRIBED IN THIS INSTRUCTION SHEET. INSTALLATION AND MAINTENANCE PROCEDURES DESCRIBED IN THIS INSTRUCTION SHEET ARE TO BE PERFORMED BY QUALIFIED SERVICE PERSONNEL ONLY.

A.2.18 GPIB Sample Program

A sample GPIB program written on a Hewlett-Packard HP85B is listed, followed by remarks. The HPIB address is 700 and the 2150/2160 IEEE address was set at 1, so talk or listen functions will show the address 701 in the program.

Program:	Remarks:
400 DIM A$ [50]	400 Open field for measurement string.
500 DIM C$ [50]	500 Open field for command string.
550 OUTPUT 701 ; "REMOTEON"	550 Send REMOTEON to 2150/2160.
600 OUTPUT 701 ; "REMOTE["	600 Temporarily disconnect keyboard and start switch.
800 PRINT "ENTER SETUP COMMAND"	
900 PRINT "THEN PRESS RETURN"	
1000 PRINT "IF NO MORE COMMANDS"	
1100 PRINT "TYPE '0 RETURN'"	
1200 INPUT C$	1200 Input one command from remote setup dictionary.
1300 PRINT C$	
1350 PRINT ""	
1400 CLEAR	
1500 IF C$="0" THEN GOTO 1800	1500 If C$=0 then goto measurement portion of program.
1600 OUTPUT 701 ; C$	1600 Address 2150/2160 and send command.
1700 GOTO 1200	1700 Return to setup routine if C$ not 0.
1800 OUTPUT 701 ; "]"	1800 Re-activate screen and keyboard at end of setup.
1900 PRINT "# OF MEASUREMENTS"	
2000 INPUT J	2000 Operator inputs number of single cycle operations the 2150/2160 will perform.
2100 PRINT J	
2200 FOR I=1 TO J	2200 'I' will be the number of operations.
2300 OUTPUT 701 ; "SINGLE"	2300 Address the 2150/2160 and send the 'SINGLE' command.
2400 S=0	2400 Set variable S to 0.
2500 S=SPOLL (701)	2500 Monitor the 2150/2160 to see if the SRQ has been set.
2600 IF S>=64 THEN GOTO 2800	2600 If SRQ is set then address the 2150/2160 and print the measurement string.
2700 IF S=0 THEN GOTO 2400	2700 If SRQ has not been set then remain in SRQ monitor mode.
2800 ENTER 701 ; A$	2800 Address 2150/2160 and read output string.

Program:	Remarks:
29ØØ PRINT A$	29ØØ Print output string.
3ØØØ NEXT I	3ØØØ Repeat single cycles until operator number is reached.
31ØØ GOTO 8ØØ	31ØØ Return to setup routine.
32ØØ END	

Sample Output (see Section A.2.16.2 for Output String format):

```
ENTER SETUP COMMAND
THEN PRESS RETURN
IF NO MORE COMMANDS
TYPE 'Ø RETURN'
-2 CODE
1ØØ NANO NOMINAL

.ØØ5 MINOR
 1   1 BIN #
 5   2 BIN #
1Ø   3 BIN #
2Ø   4 BIN #
1ØØØ HZ
LOCK
FAST
C
D
SCREENOFF
Ø
# OF MEASUREMENTS   1Ø

ØØ,  1ØØ.7E-Ø9,  8ØØ.E-Ø6, CSD ,  1
ØØ,  1ØØ.7E-Ø9,  8ØØ.E-Ø6, CSD ,  1
ØØ,  1ØØ.7E-Ø9,  8ØØ.E-Ø6, CSD ,  1
ØØ,  1ØØ.7E-Ø9,  8ØØ.E-Ø6, CSD ,  1
ØØ,  1ØØ.7E-Ø9,  8ØØ.E-Ø6, CSD ,  1
ØØ,  1ØØ.7E-Ø9,  8ØØ.E-Ø6, CSD ,  1
ØØ,  1ØØ.7E-Ø9,  8ØØ.E-Ø6, CSD ,  1
ØØ,  1ØØ.7E-Ø9,  8ØØ.E-Ø6, CSD ,  1
ØØ,  1ØØ.7E-Ø9,  8ØØ.E-Ø6, CSD ,  1
ØØ,  1ØØ.7E-Ø9,  8ØØ.E-Ø6, CSD ,  1

ENTER SETUP COMMAND
THEN PRESS RETURN
IF NO MORE COMMANDS
TYPE 'Ø RETURN'
```

A.2.19 RS-232C Sample Program

A sample RS-232C program written on a Hewlett-Packard HP85B is listed, followed by output and remarks. The program address code is 1Ø.

Program:	Remarks:
1Ø DIM A$[5Ø]	1Ø Open field for measurement string.
2Ø DIM C$[5Ø]	2Ø Open field for command string.
3Ø OUTPUT 1Ø ; "REMOTEON"	3Ø Send "REMOTEON" to 215Ø/216Ø.
4Ø OUTPUT 1Ø ; "REMOTE["	4Ø Temporarily disconnect keyboard and start switch.
5Ø CLEAR	
6Ø RESET 1Ø	6Ø Clears HP85B RS-232C buffer
7Ø DISP "ENTER SETUP COMMAND"	
8Ø DISP "THEN PRESS 'RETURN'"	
9Ø DISP "IF NO MORE COMMANDS"	
1ØØ DISP "TYPE 'Ø RETURN'"	
11Ø INPUT C$	11Ø Input one command from remote setup dictionary.
12Ø DISP C$	
13Ø CLEAR	
14Ø IF C$="Ø" THEN GOTO 17Ø	14Ø If C$=Ø, then go to measurement portion of program.
15Ø OUTPUT 1Ø ;C$	15Ø Address 215Ø/216Ø and send command.
16Ø GOTO 11Ø	16Ø Return to setup routine if C$ not Ø.
17Ø OUTPUT 1Ø ;"]"	17Ø Re-activate screen and keyboard at end of setup.
18Ø ENTER 1Ø ;C$	
19Ø DISP "# OF MEASUREMENTS"	
2ØØ INPUT J	2ØØ Operator inputs number of single cycle operations the 215Ø/216Ø will perform.
21Ø DISP J	
22Ø FOR I=Ø TO J	22Ø 'I' will be the number of operations.
23Ø OUTPUT 1Ø ;"SINGLE"	23Ø Address the 215Ø/216Ø and send the 'SINGLE' command.
24Ø ENTER 1Ø ; A$	24Ø Address the 215Ø/216Ø and read the output string.
25Ø DISP A$	25Ø Print the output string.
26Ø NEXT I	26Ø Repeat single cycle measurements until operator number is reached.
27Ø GOTO 3Ø	27Ø Return to setup routine.
28Ø END	

Sample Output (see Section A.2.16.2 for Output String format):

```
ENTER SETUP COMMAND
THEN PRESS RETURN
IF NO MORE COMMANDS
TYPE 'Ø RETURN'
-2 CODE
1ØØ NANO NOMINAL

.ØØ5 MINOR
 1   1 BIN #
 5   2 BIN #
1Ø   3 BIN #
2Ø   4 BIN #
1ØØØ HZ
LOCK
FAST
C
D
SCREENOFF
Ø
# OF MEASUREMENTS   1Ø
NO ERRORS

ØØ,  1ØØ.7E-Ø9,  8ØØ.E-Ø6, CSD ,  1
ØØ,  1ØØ.7E-Ø9,  8ØØ.E-Ø6, CSD ,  1
ØØ,  1ØØ.7E-Ø9,  8ØØ.E-Ø6, CSD ,  1
ØØ,  1ØØ.7E-Ø9,  8ØØ.E-Ø6, CSD ,  1
ØØ,  1ØØ.7E-Ø9,  8ØØ.E-Ø6, CSD ,  1
ØØ,  1ØØ.7E-Ø9,  8ØØ.E-Ø6, CSD ,  1
ØØ,  1ØØ.7E-Ø9,  8ØØ.E-Ø6, CSD ,  1
ØØ,  1ØØ.7E-Ø9,  8ØØ.E-Ø6, CSD ,  1
ØØ,  1ØØ.7E-Ø9,  8ØØ.E-Ø6, CSD ,  1
ØØ,  1ØØ.7E-Ø9,  8ØØ.E-Ø6, CSD ,  1


ENTER SETUP COMMAND
THEN PRESS RETURN
IF NO MORE COMMANDS
TYPE 'Ø RETURN'
```

A.3 NON-VOLATILE MEMORY

The Non-Volatile Memory option allows the VideoBridge to save measurement and binning information when line voltage drops sufficiently to affect power supply levels or when the instrument is turned off. The option consists of a factory-installed 2K ZRAM (Zero Power Random Access Memory, P/N 55843) chip, U31, located on the motherboard. To engage this option, program test code 6 according to the instructions in Section 2.1.1.1.

When 6 CODE is programmed, the VideoBridge still functions in the normal manner. The ZRAM, however,

1) stores the display and binning setup, including all zero calibration offsets. This data is not updated; it is retained regardless of changes made after entering 6 CODE.

2) continuously updates the bin count. It is, in a sense, "waiting" for a power loss condition, when it will retain its last updated bin count data.

NOTE: Zero offsets are valid only under the conditions they were taken. Calibrated offsets retrieved from ZRAM may not be valid due to changes from original calibration conditions. If there is any question as to the validity of these stored offsets (due to repositioned test leads, changes in environment, different test fixture, etc.), simply take a measurement of the fixture or clips. The resistance reading should be zero, or nearly zero. If not, the fixture or clips need to be re-calibrated.

Once power has been restored, enter -6 CODE to recall the last updated bin count from the ZRAM (the ZRAM will also recall the original direct display setup, including zero calibration information present at the time 6 CODE was entered). Push <STAT> and the VideoBridge will display the bin count it had at the time of the power loss.

Entering 2 CODE will reset all bin counters to zero in both normal RAM and ZRAM. -2 CODE will reset bin limits and bin counters in normal RAM along with the bin counters in ZRAM.

NOTE: When 6 CODE is first programmed, zero calibration offsets are stored for convenient retrieval in case of power outage. Should different calibration offsets be made before an intentional power down, -6 CODE will recall the original calibration settings. To prevent the use of an undesired setup, enter -6 CODE, -22 CODE, and re-calibrate.

DO NOT ENTER TEST CODE 6 OR TEST CODE -6 WITHOUT ZRAM OPTION INSTALLED.

After power has been turned off and back on again, the VideoBridge will be in its normal power-up condition--Auto LRC.

Handler modes (8 and -8 CODE) and Keyboard Lock (9 CODE) are not saved in Non-Volatile Memory. When power is restored and -6 CODE is entered, any of these test codes which had been previously activated must be re-entered to completely restore operation.

A.4 +200 VOLT DC BIAS OPTION (SP5240)

The Model SP5240 is a Model 2150 or 2160 VideoBridge with a factory installed option of extended DC bias capability. All other SP5240 features, functions, and specifications are identical to those of the Model 2150 or 2160.

A DC bias of up to +200V can be applied to the rear panel bias terminals. Be sure to observe polarity. The Bias Voltage is not applied to the unknown until test code 1 is programmed. Measurements with bias are available for capacitance only. The bias supply must have low ripple with internal current limit of 100mA and its AC output impedance must be less than 1 ohm at the test frequency. If the bias source impedance is not low compared to the unknown, a bypass capacitor whose impedance is 1/5 of the range resistor used can be connected across the bias terminal posts. The procedure for applying and removing +200V DC bias is the same as described for +50V DC bias in Section 2.10 of this manual.

Changes to the analog card for the +200VDC option are as follows:

Analog Circuit Assembly, P/N 53675 changes to P/N 56482

C4 and C29, P/N 45645 (100V rating), change to P/N 56473 (250V rating)

CR22, P/N 55494 (surge arrestor) changes to P/N 56474 (surge arrestor).

DANGER

ELECTRICAL SHOCK HAZARD EXISTS WHEN A BIAS SUPPLY IS CONNECTED TO THIS INSTRUMENT. USER SUPPLIED BIAS VOLTAGE MAY BE PRESENT AT INSTRUMENT TERMINALS AND TEST FIXTURES. USE ONLY BIAS VOLTAGES UP TO +200VDC AND BIAS SUPPLIES CURRENT LIMITED AT 100mA. DO NOT TOUCH, CONNECT, OR DISCONNECT THE UNKNOWN COMPONENT OR BNC CABLES WHILE A BIAS VOLTAGE IS APPLIED. FAILURE TO OBSERVE THIS WARNING MAY RESULT IN SEVERE INJURY OR DEATH.

APPENDIX B
OPTIONS PARTS LISTS AND DIAGRAMS

B.1 GENERAL HANDLER INTERFACE CIRCUIT ASSEMBLY (P/N 47895)

CIRCUIT NO.	DESCRIPTION	ESI PART NO.
	PC BOARD, HANDLER INTERFACE	46902
C1-C5	CAPACITOR, 0.01 microfarad, 50V CERAMIC	12144
C6,C7	CAPACITOR, 6.8 microfarad, 35V TANTALUM	43792
C8	CAPACITOR, 100 microfarad, 25V ELECTROLYTIC	13683
J2	CONNECTOR, 36 PIN, FEMALE	15739
K1-K13	RELAY, 1 FORM A, 5VDC, 14 PIN DIP	24804
R2	RESISTOR, 120 ohm, 1/4W, 10%	13908
U1,U2,U10	RESISTOR, NETWORK, SIP, 10 PIN, 2.2 kilohm	45846
U3,U4,U5	IC, 7407	24076
U6	IC, 7406	20678
U7	IC, TIL111, OPTO-ISOLATOR	44224
U8	IC, 4N28 OPTO-ISOLATOR	20674
U9	IC, 8304	45262
U11	IC, 8131	45527
U12	IC, 3881	47884
	BRACKET, CONNECTOR, MTG	45166
	BRACKET, GROUND	45951
	SOCKET, IC, 6 PIN DIP	45831
	SOCKET, IC, 14 PIN DIP	19189
	SOCKET, IC, 16 PIN DIP	20860
	SOCKET, IC, 20 PIN DIP	45660
	SOCKET, IC, 40 PIN DIP	41342

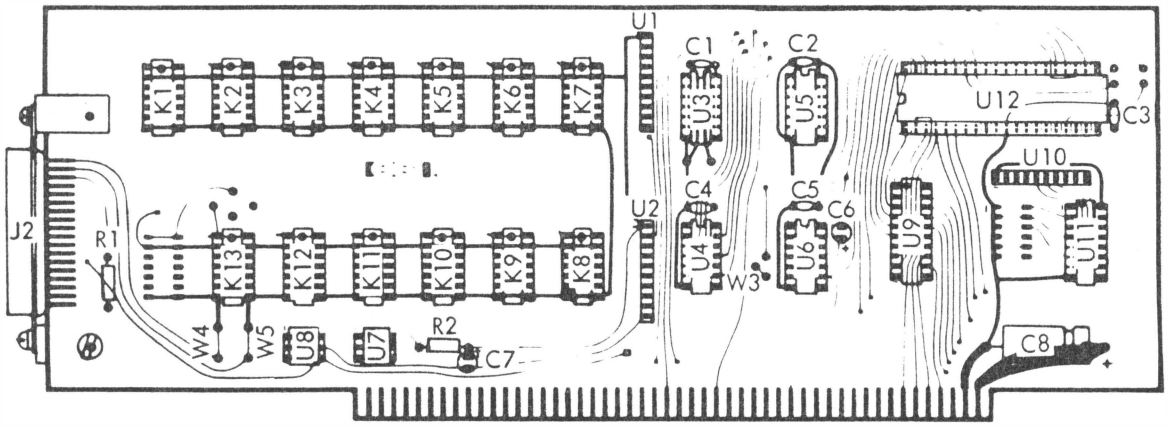

Figure B-1. General Handler Interface Circuit Assembly (P/N 47895)

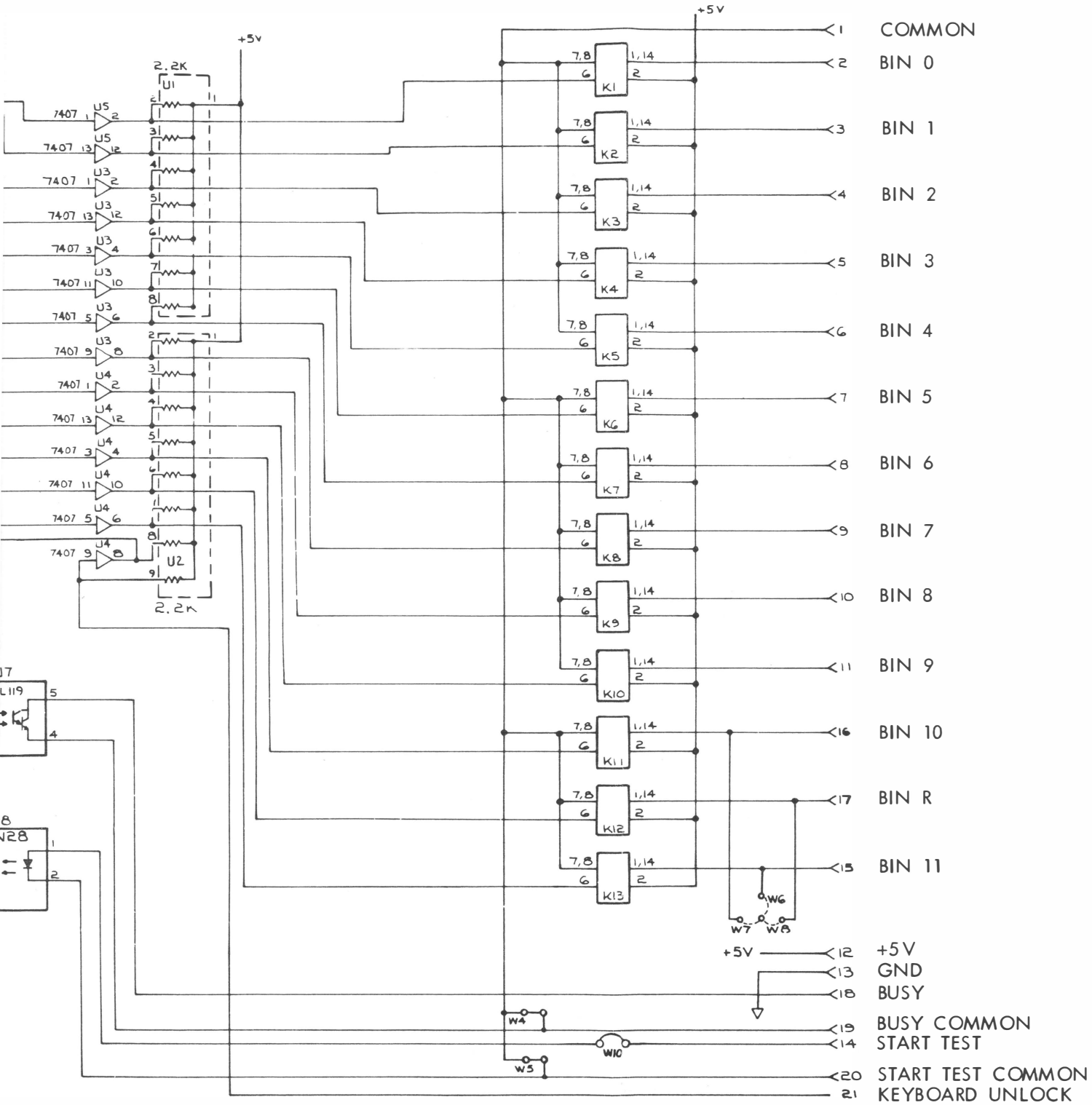

Figure B-1. General Handler Interface Circuit Assembly (P/N 47895) (cont)

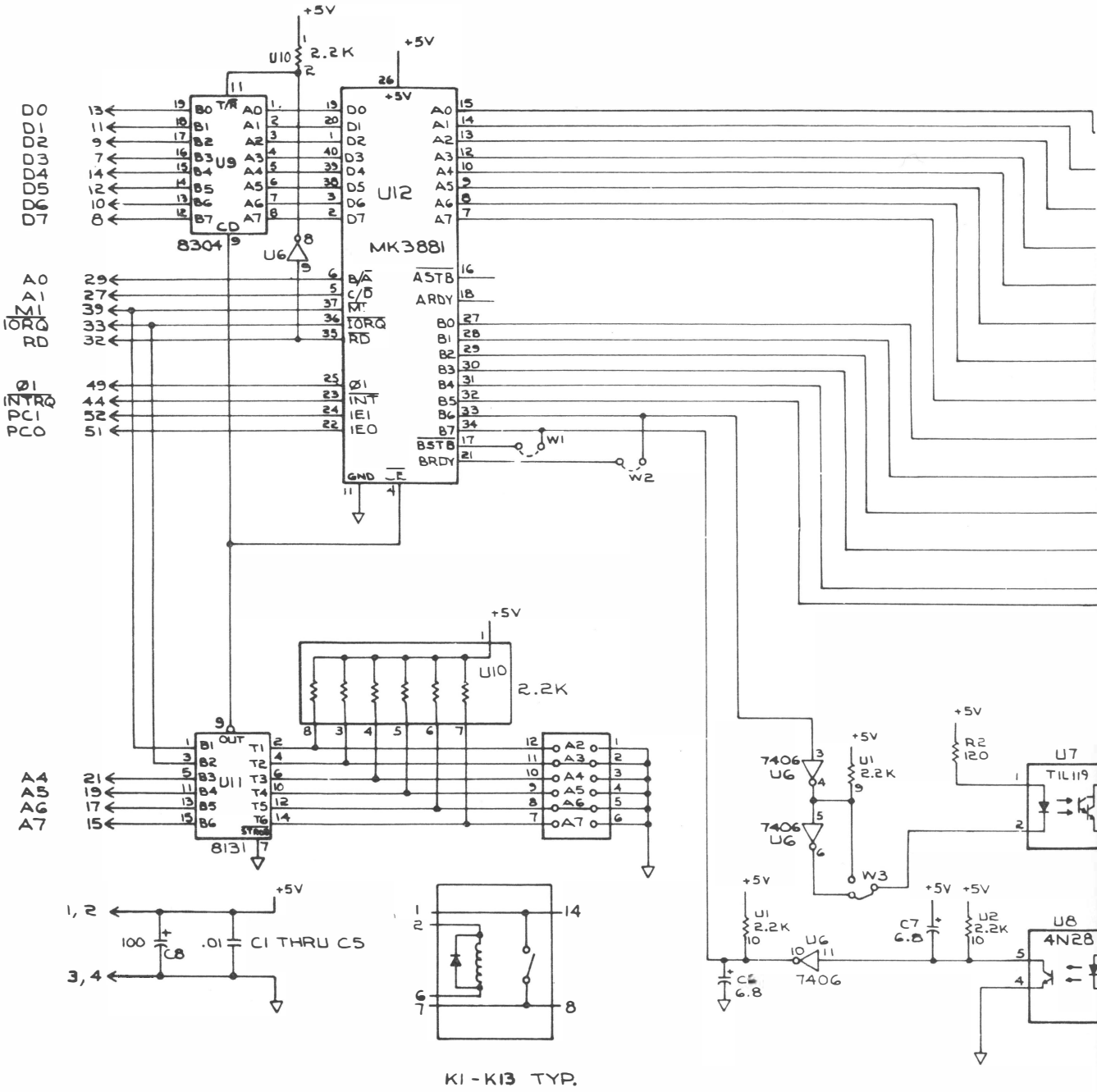

NOTE:

1. ALL RESISTOR VALUES ARE IN OHMS, 1/4 W, 10% UNLESS OTHERWISE STATED.
2. ALL CAPACITORS ARE IN μF UNLESS OTHERWISE STATED.

REF. DES.	TYPE	+5V	GND
U3, U4, U5	7407	14	7
U6	7406	14	7
U9	8304	20	10
U1, U2, U10	2.2K RES.	1	—
U11	8131	16	8
U12	3881	26	11

B.2 HANDLER INTERFACE CIRCUIT ASSEMBLY (MCT BROWNE) (P/N 47897)

CIRCUIT NO.	DESCRIPTION	ESI PART NO.
	PC BOARD, HANDLER INTERFACE	46902
C1-C5	CAPACITOR, 0.01 microfarad, 50V CERAMIC	12144
C6,C7	CAPACITOR, 6.8 microfarad, 35V TANTALUM	43792
C8	CAPACITOR, 100 microfarad, 25V ELECTROLYTIC	13683
J2	CONNECTOR, 36 PIN, FEMALE	15739
K1-K13	RELAY, 1 FORM A, 5VDC, 14 PIN DIP	24804
R1	RESISTOR, 560 ohm, 1/4W, 10%	13916
R2	RESISTOR, 120 ohm, 1/4W, 10%	13908
U1,U2,U10	RESISTOR, NETWORK, SIP, 10 PIN, 2.2 kilohm	45846
U3,U4,U5	IC, 7407	24076
U6	IC, 7406	20678
U7,U8	IC, 4N28 OPTO-ISOLATOR	20674
U9	IC, 8304	45262
U11	IC, 8131	45527
U12	IC, 3881	47884
	BRACKET, CONNECTOR, MTG	45166
	BRACKET, GROUND	45951
	SOCKET, IC, 6 PIN DIP	45831
	SOCKET, IC, 14 PIN DIP	19189
	SOCKET, IC, 16 PIN DIP	20860
	SOCKET, IC, 20 PIN DIP	45660
	SOCKET, IC, 40 PIN DIP	41342

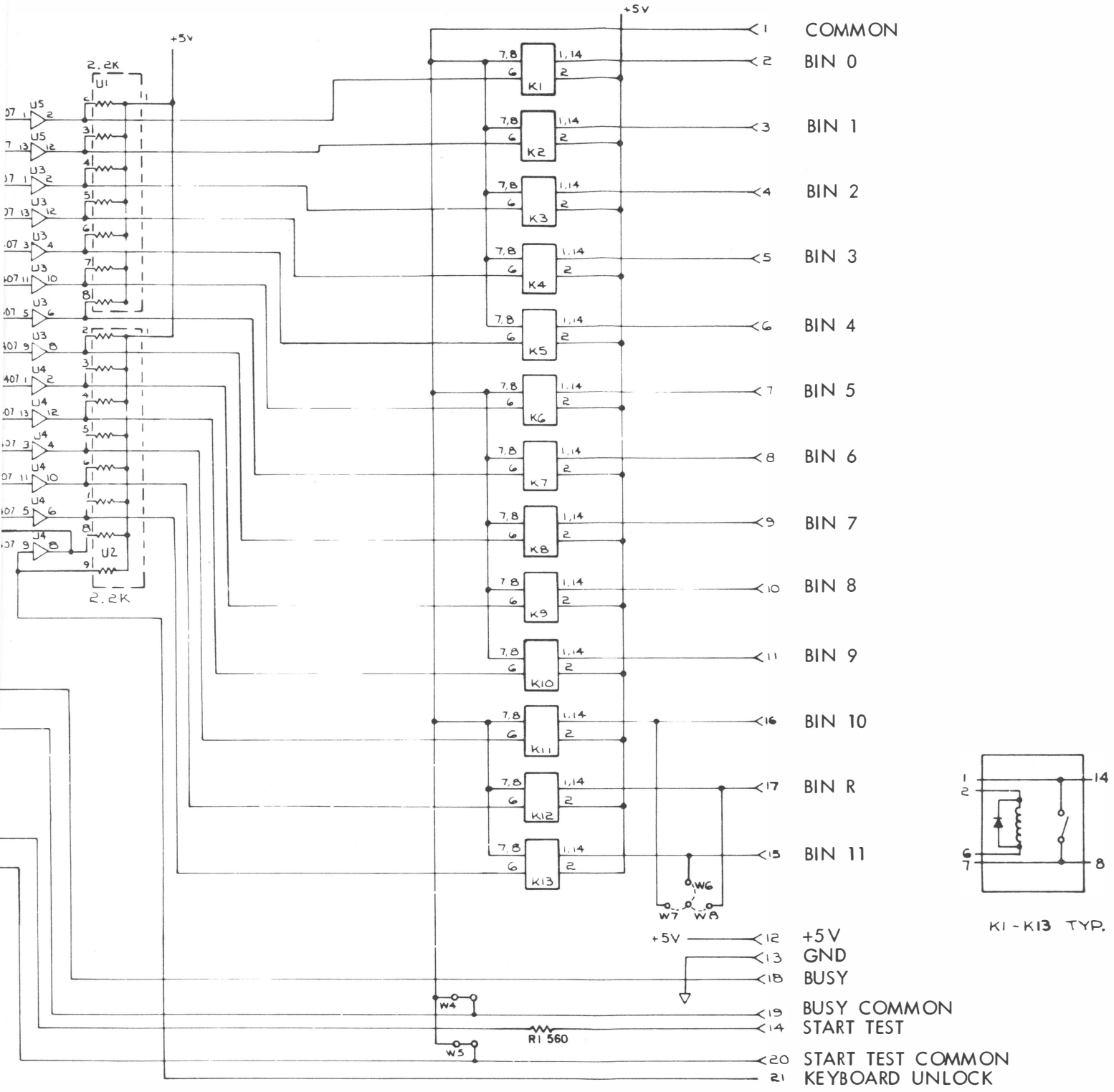

NOTE:

1. ALL RESISTOR VALUES ARE IN OHMS, 1/4 W, 10% UNLESS OTHERWISE STATED.
2. ALL CAPACITORS ARE IN μF UNLESS OTHERWISE STATED.

REF. DES.	TYPE	+5V	GND
U3, U4, U5	7407	14	7
U6	7406	14	7
U9	8304	20	10
U1, U2, U10	2.2K RES.	1	—
U11	8131	16	8
U12	3881	26	11

Figure B-2. MCT Browne Handler Interface Circuit Assembly (P/N 47897)

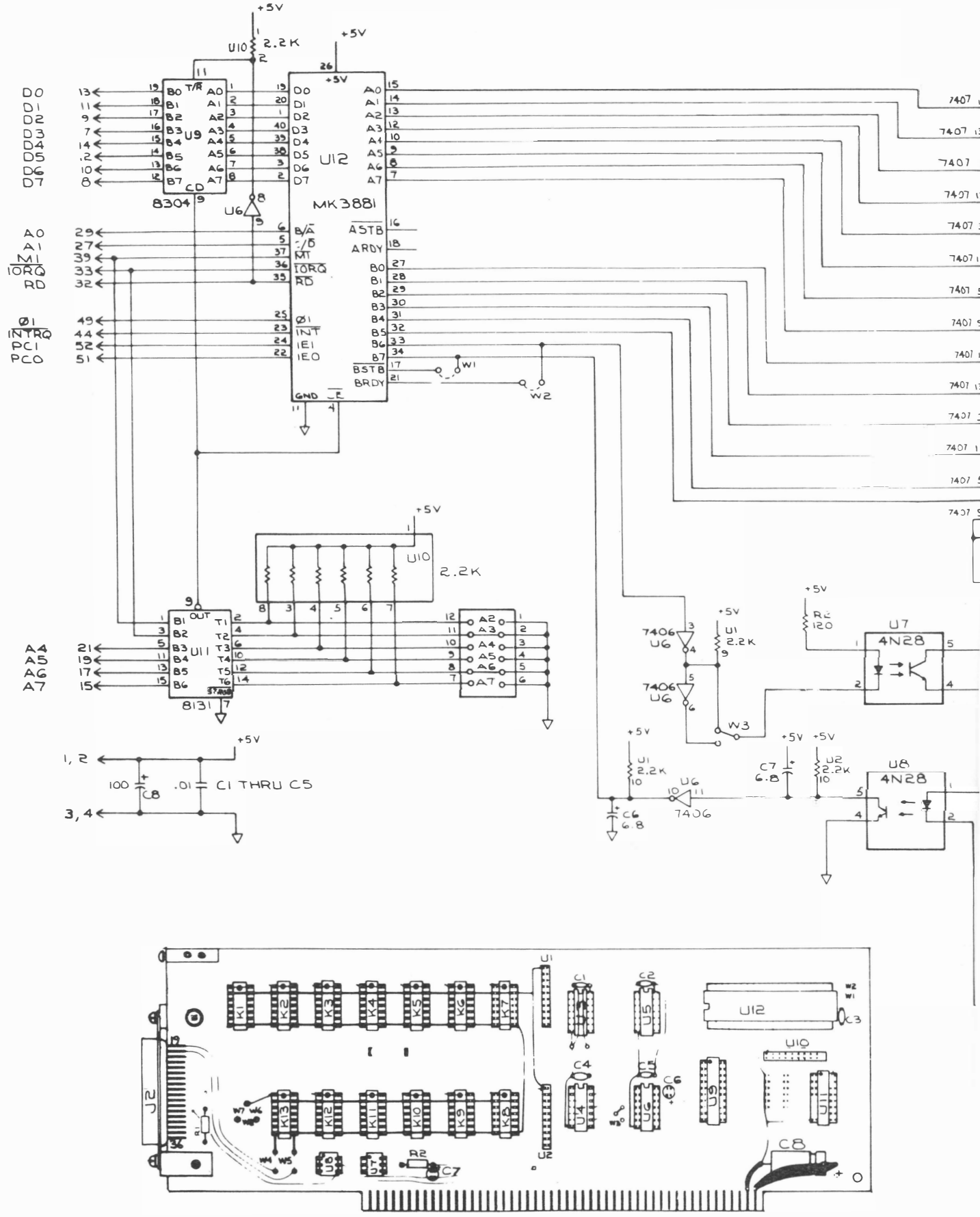

+5V
U10
2.2K
U9
8304
U12
MK3881
D0
D1
D2
D3
D4
D5
D6
D7
A0
A1
M1
IORQ
RD
Ø1
INTRQ
PC1
PC0
ASTB
ARDY
BSTB
BRDY
W1
W2
U11
8131
A4
A5
A6
A7
7407
7406
U6
U1
2.2K
R2
120
U7
4N28
W3
C7
6.8
U2
2.2K
U8
4N28
C6
6.8
1, 2
3, 4
100
C8
.01
C1 THRU C5
U1
C1
C2
U5
U12
C3
U10
C4
C5
C6
U4
U6
U9
U11
C8
U2
U7
R2
C7
J2
K1
K2
K3
K4
K5
K6
K7
K13
K12
K11
K10
K9
K8

B.3 HANDLER INTERFACE CIRCUIT ASSEMBLY (DAYMARC) (P/N 47896)

CIRCUIT NO.	DESCRIPTION	ESI PART NO.
	PC BOARD, HANDLER INTERFACE	46902
C1-C5	CAPACITOR, 0.01 microfarad, 50V CERAMIC	12144
C6,C7	CAPACITOR, 6.8 microfarad, 35V TANTALUM	43792
C8	CAPACITOR, 100 microfarad, 25V ELECTROLYTIC	13683
J2	CONNECTOR, 36 PIN, FEMALE	15739
K1-K13	RELAY, 1 FORM A, 5VDC, 14 PIN DIP	24804
R1	RESISTOR, 560 ohm, 1/4W, 10%	13916
R2	RESISTOR, 120 ohm, 1/4W, 10%	13908
U1,U2,U10	RESISTOR, NETWORK, SIP, 10 PIN, 2.2 kilohm	45846
U3,U4,U5	IC, 7407	24076
U6	IC, 7406	20678
U7,U8	IC, 4N28 OPTO-ISOLATOR	20674
U9	IC, 8304	45262
U11	IC, 8131	45527
U12	IC, 3881	47884
	BRACKET, CONNECTOR, MTG	45166
	BRACKET, GROUND	45951
	SOCKET, IC, 6 PIN DIP	45831
	SOCKET, IC, 14 PIN DIP	19189
	SOCKET, IC, 16 PIN DIP	20860
	SOCKET, IC, 20 PIN DIP	45660
	SOCKET, IC, 40 PIN DIP	41342

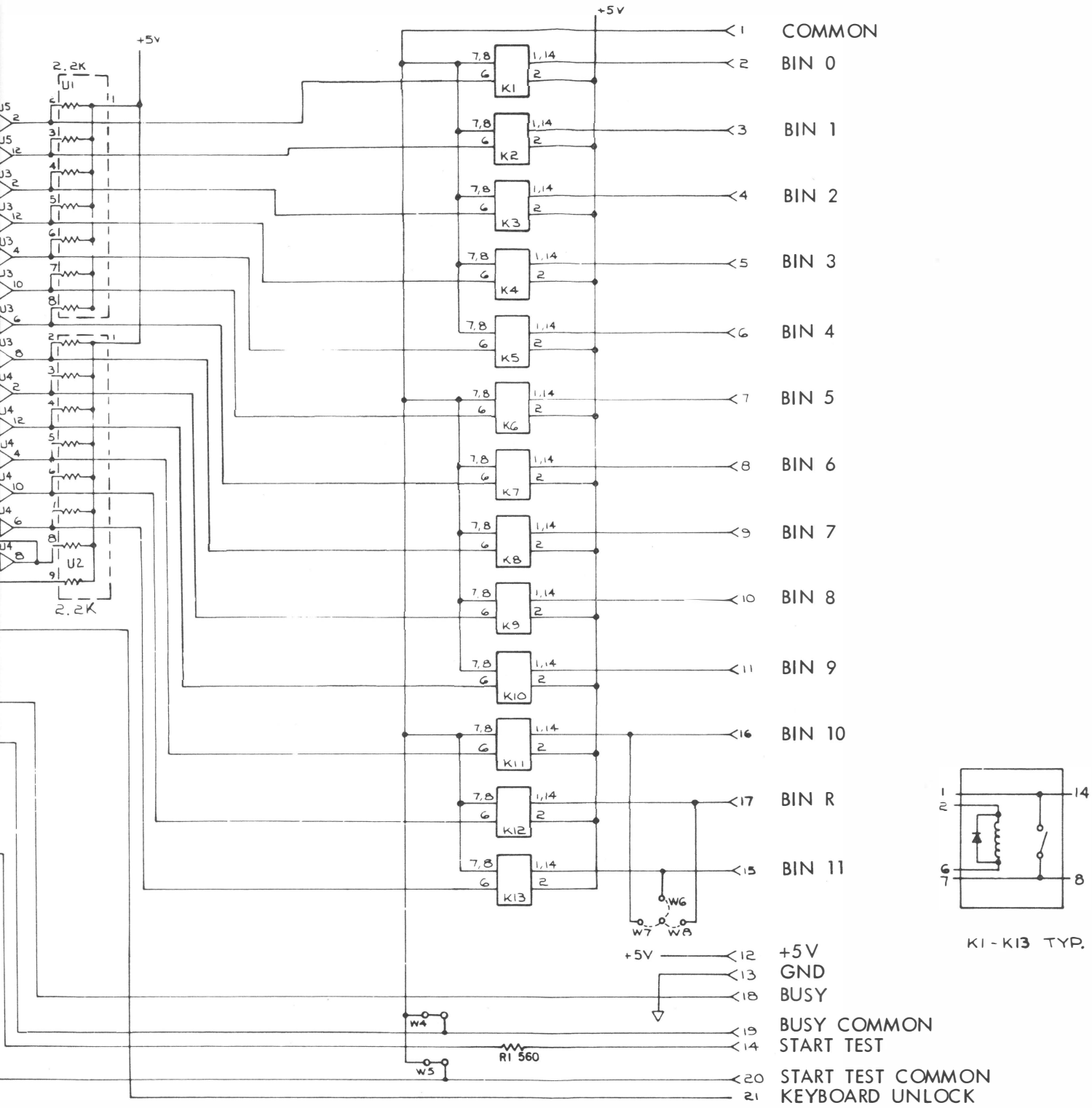

NOTE:

1. ALL RESISTOR VALUES ARE IN OHMS, 1/4 W, 10% UNLESS OTHERWISE STATED.
2. ALL CAPACITORS ARE IN μF UNLESS OTHERWISE STATED.

REF. DES.	TYPE	+5V	GND
U3, U4, U5	7407	14	7
U6	7406	14	7
U9	8304	20	10
U1, U2, U10	2.2K RES.	1	—
U11	8131	16	8
U12	3881	26	11

Figure B-3. Daymarc Handler Interface Circuit Assembly (P/N 47896)

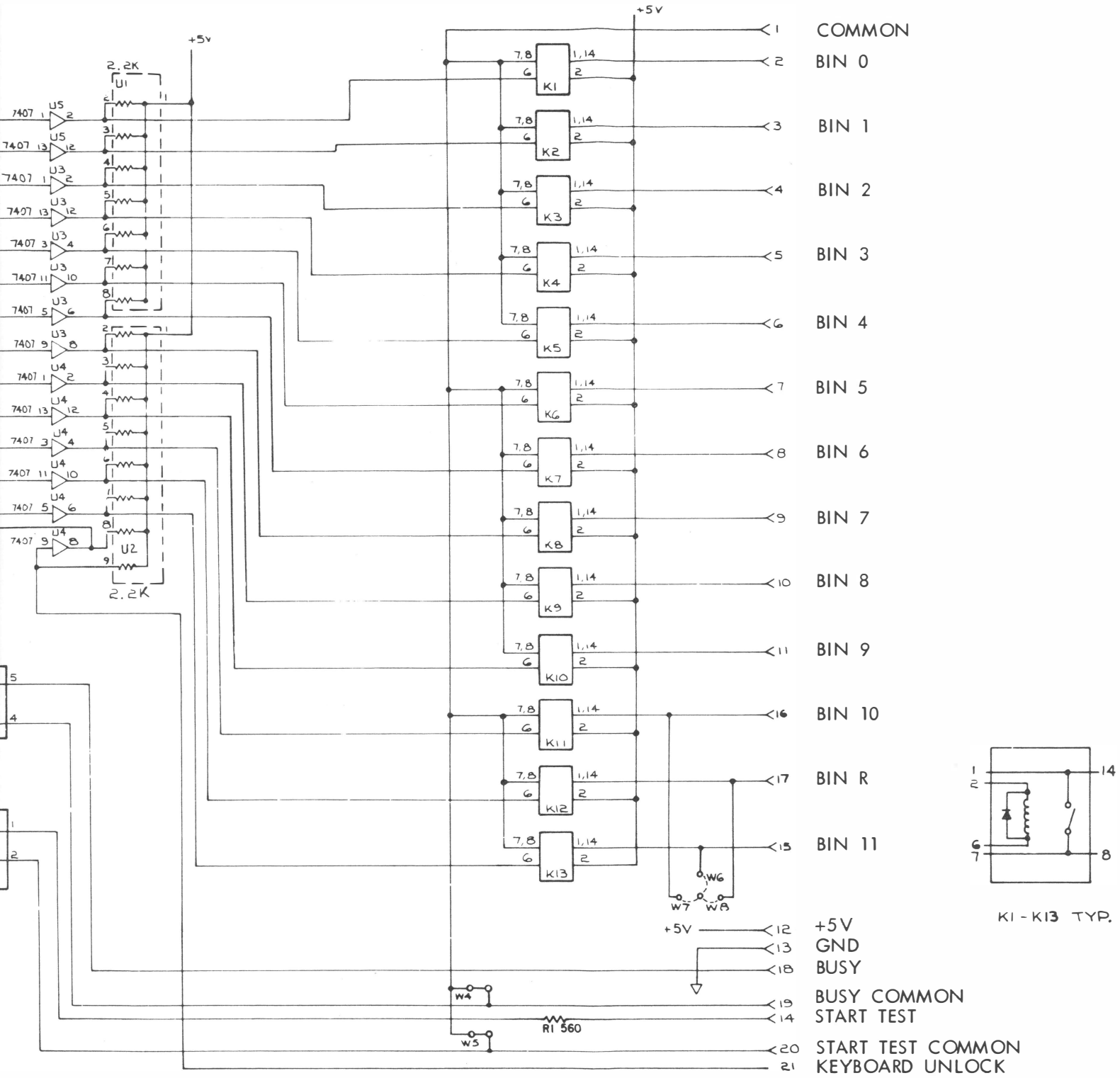

NOTE:

1. ALL RESISTOR VALUES ARE IN OHMS, 1/4 W, 10% UNLESS OTHERWISE STATED.
2. ALL CAPACITORS ARE IN μF UNLESS OTHERWISE STATED.

REF. DES.	TYPE	+5V	GND
U3, U4, U5	7407	14	7
U6	7406	14	7
U9	8304	20	10
U1, U2, U10	2.2K RES.	1	—
U11	8131	16	8
U12	3881	26	11

Figure B-3. Daymarc Handler Interface Circuit Assembly (P/N 47896)

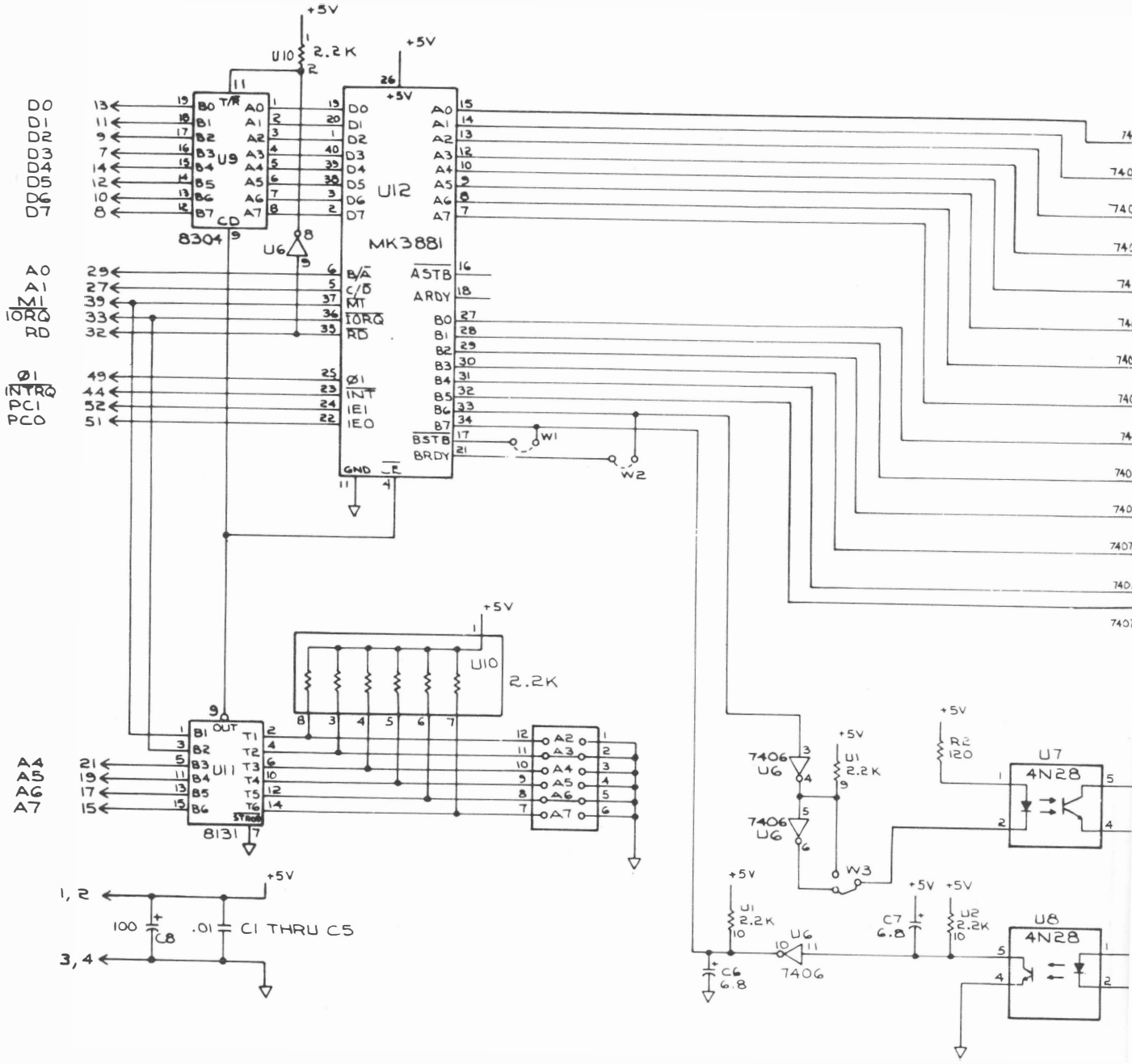

+5V
U10
2.2K
U9
8304
U12
MK3881
U6
D0
D1
D2
D3
D4
D5
D6
D7
A0
A1
M1
IORQ
RD
Ø1
INTRQ
PC1
PC0
ASTB
ARDY
BSTB
BRDY
W1
W2
U11
8131
A4
A5
A6
A7
7406
U1
2.2K
R2
120
U7
4N28
W3
U8
4N28
C7
6.8
U2
2.2K
C6
6.8
100
C8
.01
C1 THRU C5
1, 2
3, 4

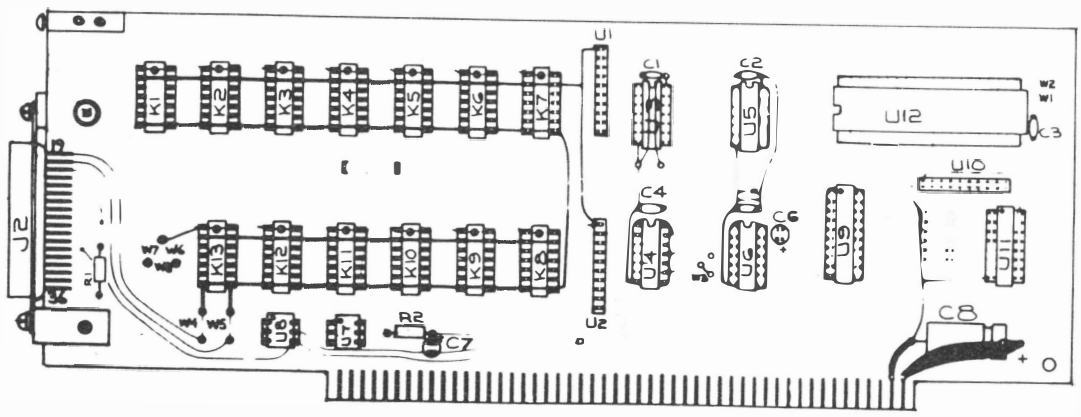

U1
U2
U12
U10
U11
U9
U6
U4
U5
C1
C2
C3
C4
C6
C7
C8
R1
R2
J2
K1
K2
K3
K4
K5
K6
K7
K8
K9
K10
K11
K12
K13
W1
W2
W3
W4
W5
W6
W7

B.4 GENERAL PURPOSE INTERFACE BUS (IEEE-488) INTERFACE CIRCUIT ASSEMBLY (P/N 46114)

CIRCUIT NO.	DESCRIPTION	ESI PART NO.
	PC BOARD, GPIB INTERFACE - IEEE - 488	46113
C1	CAPACITOR, 100 microfarad, ELECT 25V	13683
C2-C11	CAPACITOR, 0.01 microfarad, CERAMIC 50V	12144
J2	CONNECTOR, 24 PIN, FEMALE	42407
S1	SWITCH, DIP 8 POSITION	43863
U1,U2	IC, 8304	45262
U3	IC, DM8131	45527
U4	IC, TMS 9914 GPIB CONTROLLER	47843
U5	IC, Z80 CTC MK3882	46407
U6	IC, 74LS373	46201
U7	IC, 7402	20602
U8	IC, 7404	20695
U9	IC, 7420	20604
U10	IC, 7400	20600
U11	IC, 7432	47790
U12	IC, 7473	20613
U13	IC, 75162 IEEE BUS MNGR	47841
U14	IC, 75160 IEEE BUS XCVR	47842
UR1	RESISTOR NETWORK, SIP, 10 PIN, 2.2 kilohm	45846
UR2	RESISTOR NETWORK, SIP, 6 PIN, 2.2 kilohm	45847
	BRACKET, GROUNDING	45951
	BRACKET, IEEE CONNECT	45165
	BUSS STRIP	23997
	SOCKET, IC 14 PIN DIP	19189
	SOCKET, IC 16 PIN DIP	20860
	SOCKET, IC 40 PIN DIP	41342
	SOCKET, IC 28 PIN DIP	43844
	SOCKET, IC 20 PIN DIP	45660
	SOCKET, IC 22 PIN DIP	47874
	STANDOFF, STUD MOUNT	42392

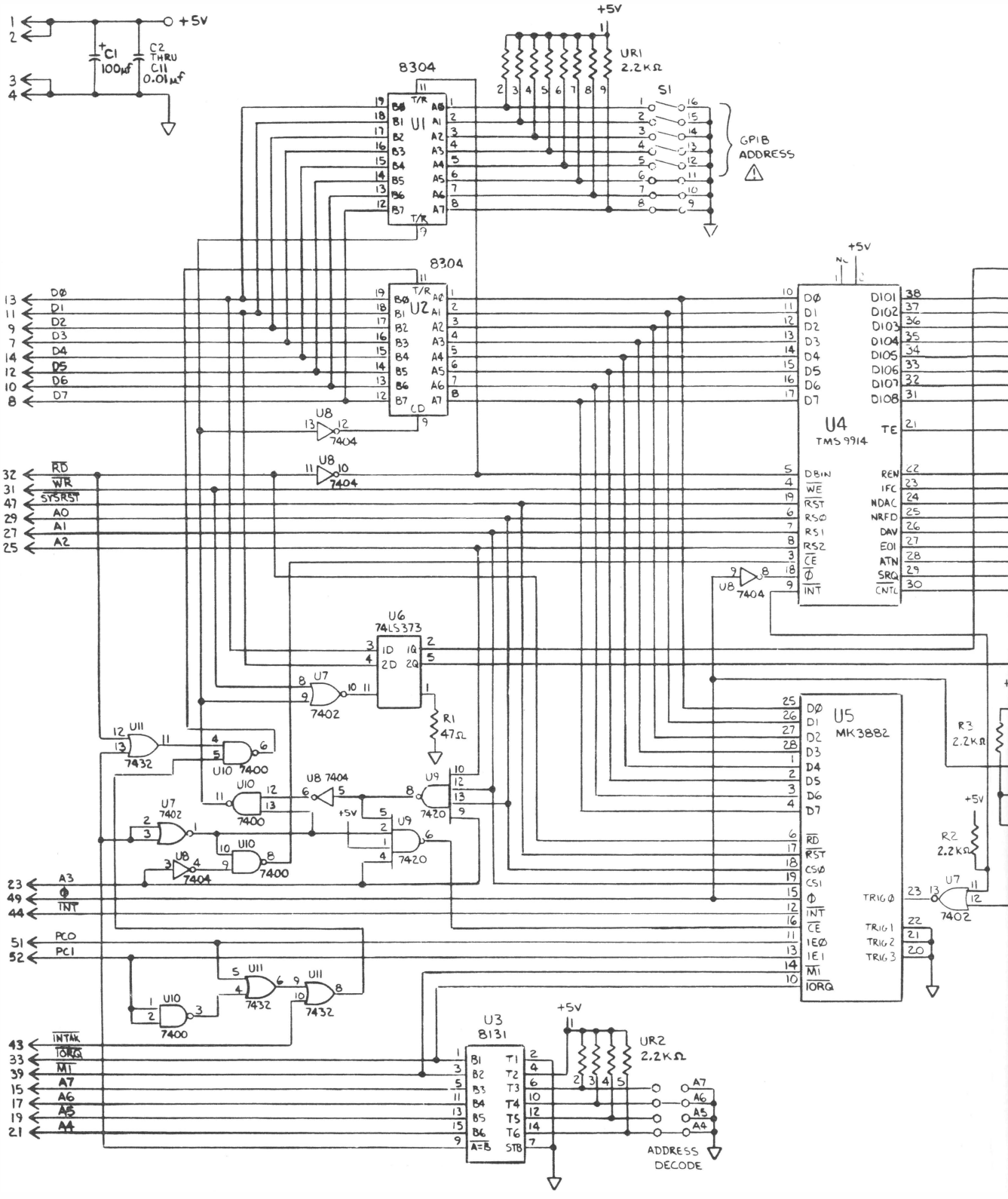
+5V
C1 100µf
C2 THRU C11 0.01µf
8304
U1
UR1 2.2KΩ
S1
GPIB ADDRESS
U2
U4 TMS 9914
U5 MK3882
U6 74LS373
U7 7402
U8 7404
U9 7420
U10 7400
U11 7432
R1 47Ω
R2 2.2KΩ
R3 2.2KΩ
U3 8131
UR2 2.2KΩ
ADDRESS DECODE

Fig

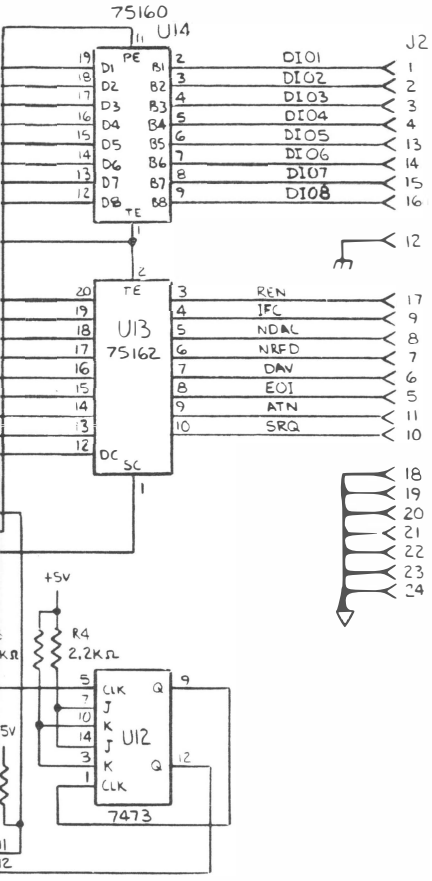

REF DES	TYPE	+5V	GND
U1, U2	8304	20	10
U3	8131	16	8
U4	TMS9914	40	20
U5	MK3882	24	5
U6	74LS373	20	10
U7	7402	14	7
U8	7404	14	7
U9	7420	14	7
U10	7400	14	7
U11	7432	14	7
U12	7473	4	11
U13	75162	22	11
U14	75160	20	10

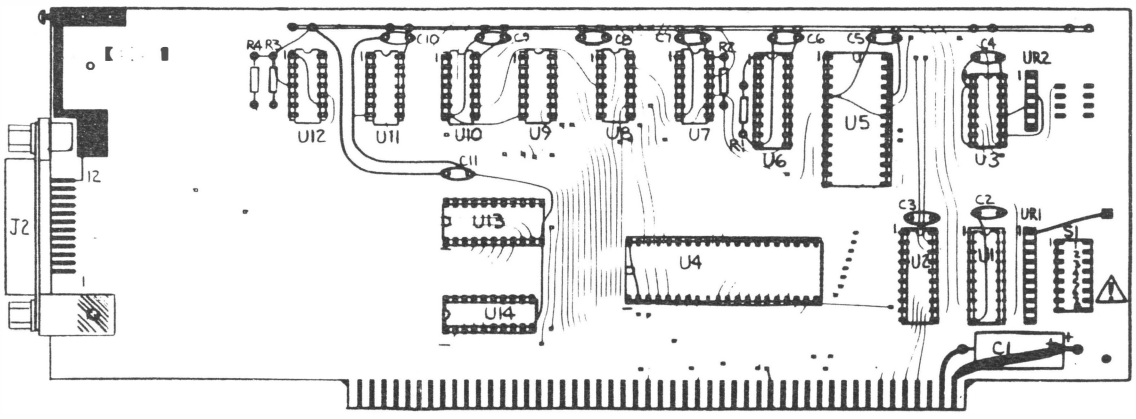

Figure B-4. General Purpose Interface Bus (IEEE-488) Circuit Assembly (P/N 46114)

B.5 RS-232C INTERFACE CIRCUIT ASSEMBLY (P/N 46724)

CIRCUIT NO.	DESCRIPTION	ESI PART NO.
	PC BOARD, RS-232/CASSETTE INTERFACE	52673
C1-C11	CAPACITOR, 0.01 microfarad, 50V, 20%	45658
J701	CONNECTOR, DB255	45983
R1	RESISTOR, 1 kilohm, 1/4W, 10%	13920
R2	RESISTOR, 15 megohm, 1/4W, 20%	13976
R3	RESISTOR, 6.8 kilohm, 1/4W,10%	13930
S1,S2	SWITCH, 10 POSITION DIP	52711
UR1,UR2	RESISTOR, SIP, SR, 2.2 kilohm	45847
U1	IC, 74LS00	52760
U2	IC, 74LS32	52582
U3	IC, 8131	45527
U5	IC, 74LS139	45656
U6,U11	IC, 8304	45262
U8	IC, 3882N-4	49183
U9	IC, 74LS74	52761
U10	IC, 74LS86	52762
U12	IC, 74LS174	43681
U13	IC, 3884N-4, Z80-SIO	49184
U14	IC, MC 14411	42933
U15	IC, MC 1488L	42301
U16	IC, MC 1489L	42302
Y1	CRYSTAL, 1.8432MHz, 0.05%	45974
	SOCKET, 14 PIN DIP	19189
	SOCKET, 16 PIN DIP	20860
	SOCKET, 40 PIN DIP	41342
	SOCKET, 24 PIN DIP	41492
	SOCKET, 20 PIN DIP	45660
	SOCKET, 28 PIN DIP	43844
	BRACKET, RS-232	45815
	BRACKET, GROUND	45951
	LABEL,	47813
	CONNECTOR, SLDR 0.025	26422

B.5 RS-232C INTERFACE CIRCUIT ASSEMBLY (P/N 46724) (cont)

CIRCUIT NO.	DESCRIPTION	ESI PART NO.
	CONNECTOR, SLDR	26430
	BAG	49245
	BOX	18612

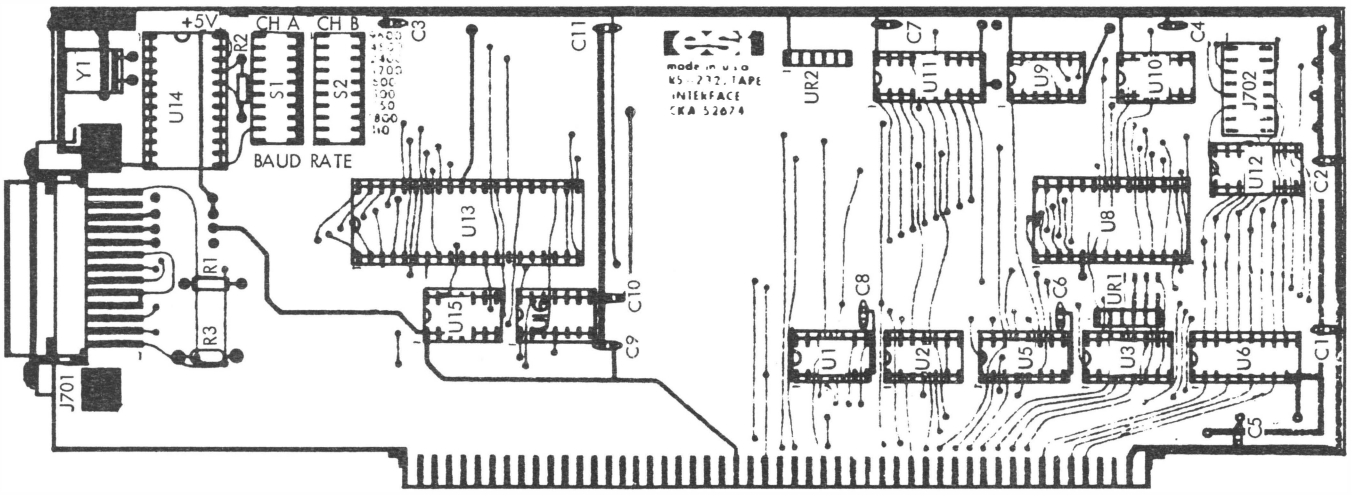

Figure B-5. RS-232C Interface Circuit Assembly (P/N 46724)

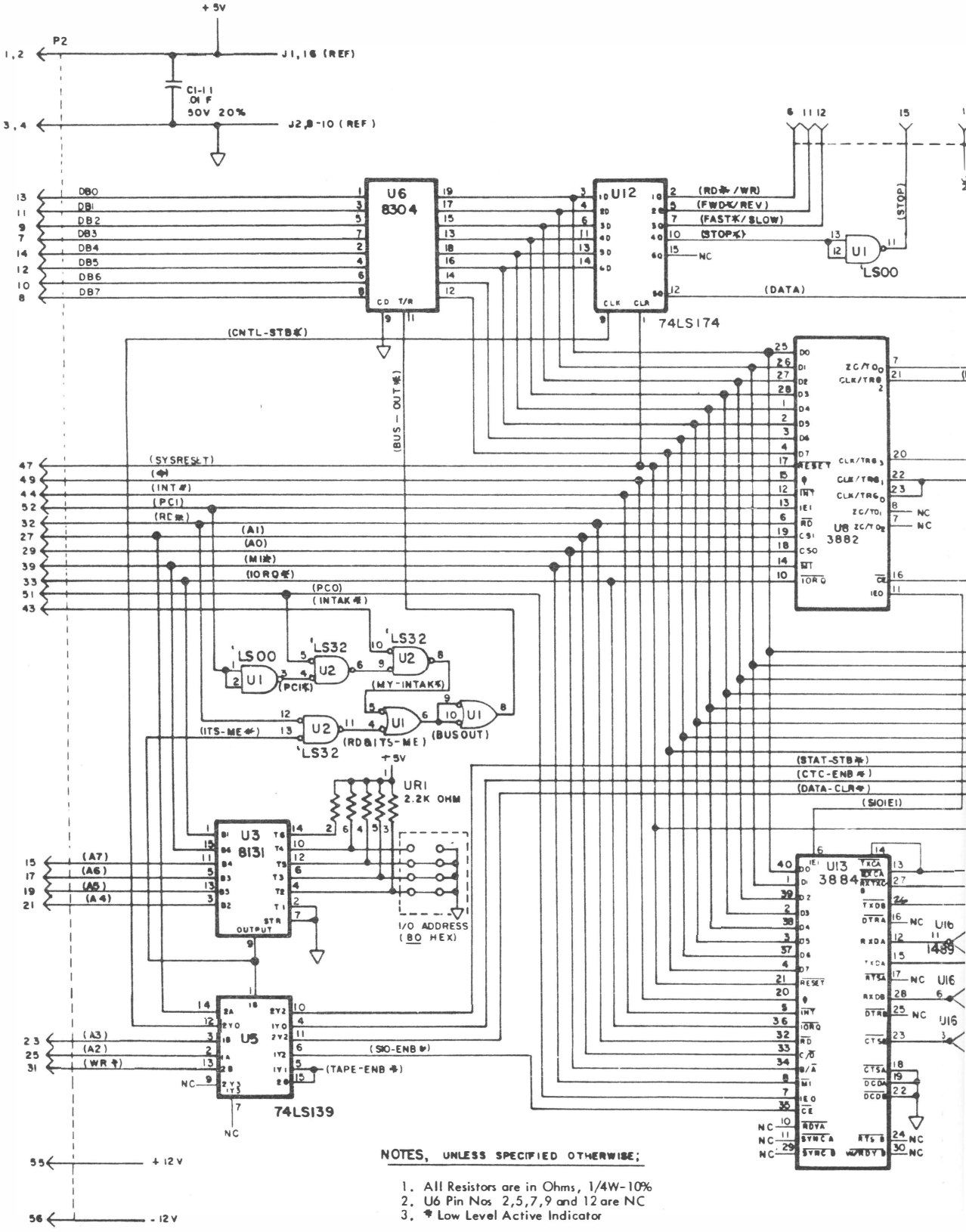

NOTES, UNLESS SPECIFIED OTHERWISE;

1. All Resistors are in Ohms, 1/4W-10%
2. U6 Pin Nos 2,5,7,9 and 12 are NC
3. * Low Level Active Indicator

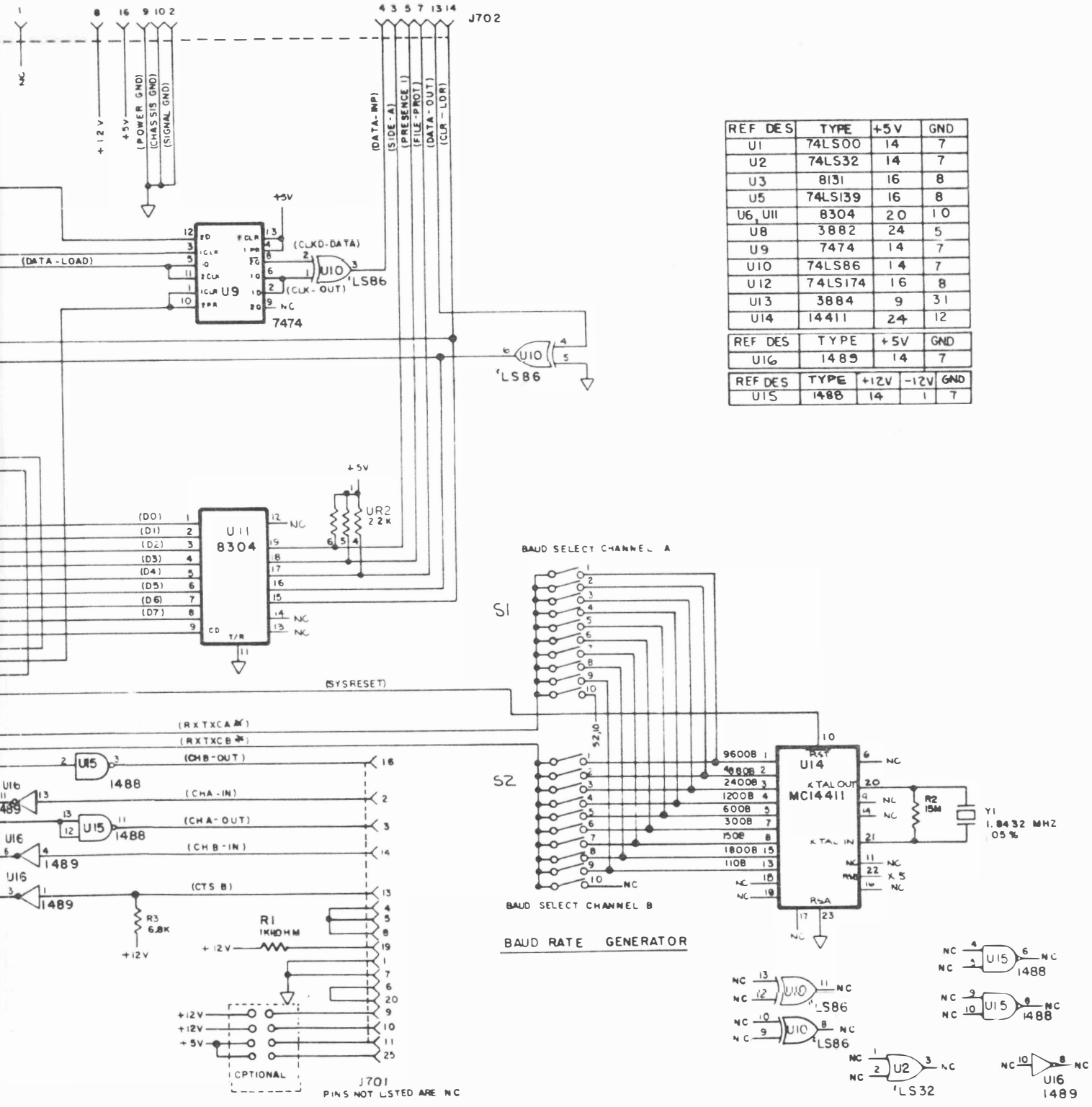

REF DES	TYPE	+5V	GND
U1	74LS00	14	7
U2	74LS32	14	7
U3	8131	16	8
U5	74LS139	16	8
U6, U11	8304	20	10
U8	3882	24	5
U9	7474	14	7
U10	74LS86	14	7
U12	74LS174	16	8
U13	3884	9	31
U14	14411	24	12

REF DES	TYPE	+5V	GND
U16	1489	14	7

REF DES	TYPE	+12V	-12V	GND
U15	1488	14	1	7

Figure B-5. RS-232C Interface Circuit Assembly (P/N 46724) (cont)

B.6 SP5240 (+200V DC BIAS OPTION) CIRCUIT ASSEMBLY (P/N 56482)

CIRCUIT NO.	DESCRIPTION	ESI PART NO.
	PC BOARD, ANALOG	53674
	PANEL, CONNECTOR	45162
	SWING LUG, BINDING POST	03247
	BRACKET, CONNECTOR PANEL	45161
	HEAT SINK, 14-16 PIN DIP	54740
	BUS, POWER STRIP	23997
	SOCKETS, 14 PIN DIP	19189
	SOCKETS, 16 PIN DIP	20860
	SOCKETS, 8 PIN DIP	52188
	SOCKETS, 8 PIN DIP	22410
	SOCKETS, 10 PIN DIP	46481
	SOCKET, 20 PIN DIP	45660
	CONNECTOR, BNC ISOLATED	41820
	FUSE CARRIER, GRAY 3AG	45966
	POST, FUSE BODY, HI PROFILE	45968
	JACK 1/8" PHONO	47082
	PLUG, MALE PIN PHONO	47083
	POST, BINDING	01435
	FUSE CARRIER ALT METRIC 5 x 20 BLK	45965
	INSULATOR, TRANSFORMER MTG	47275
C1,C3,C5,C6, C12,C13,C15, C16,C21,C22, C24-C28,C30, C31,C34,C35, C36,C43,C56	CAPACITOR, 0.1 microfarad, 50V, DIP	51268
C2,C8,C20	CAPACITOR, 30 picofarads, POLY	20242
C4,C29	CAPACITOR, 0.47 microfarad, 250V	56473
C14,C23	CAPACITOR, 0.47 microfarad, 100V	45645

B.6 SP5240 (+200V DC BIAS OPTION) CIRCUIT ASSEMBLY (cont)

CIRCUIT NO.	DESCRIPTION	ESI PART NO.
C7	CAPACITOR, 100 picofarad, POLY	18760
C9,C10,C19	CAPACITOR, 220 picofarad, POLY	29297
C11,C39	CAPACITOR, 470 picofarad, POLY	44711
C17	CAPACITOR, 0.022 microfarad, 200V, MYLAR	48665
C18	CAPACITOR, 0.022 microfarad,	12399
C37,C38	CAPACITOR, 390 picofarad, POLY	29299
C40,C41	CAPACITOR, 0.01 microfarad, 50V CERAMIC	78032
C44,C48	CAPACITOR, 8.2 picofarad, DISC	02127
C45	CAPACITOR, 25 microfarad, 25V ELECTROLYTIC	01941
C46,C47	CAPACITOR, 6.8 microfarad, TANT 35V	43792
C50,C51	CAPACITOR, 0.047 microfarad, 63VDC, FILM	54696
C52,C53	CAPACITOR, 0.0022 microfarad, 100VDC, FILM	54697
C54,C55	CAPACITOR, 0.0047 microfarad, 100VDC, MYLAR	54694
C57	CAPACITOR, 150 picofarad, POLY	29606
C58	CAPACITOR, 500 picofarad, CERAMIC, 1000V	01920
C59	CAPACITOR, 47 picofarad,	29605
C60,C61	CAPACITOR, 0.047 microfarad, 63VDC, FILM	54695
C62	CAPACITOR, 10 microfarad, 20V, TANT	43856
C63	CAPACITOR, 10 picofarad, 1kV, 5%	43277
CR1,CR2,CR5, CR6,CR7,CR9, CR10	DIODE, 1N4005, 500V PIV	13654
CR12,CR13, CR16-CR19, CR24,CR25, CR30-CR35	DIODE, 1N914A, 75V PIV	12356
CR22	SURGE ARRESTOR, GAS	56474
CR23	VARISTOR, 10V LIMIT	42632
CR26,CR27	DIODE, IN5355A, ZENER, 18V, 5 OWT	29033
F2	FUSE, 0.5A, 250V, 3AG, FAST-BLOW	01802

B.6 SP5240 (+200V DC BIAS OPTION) CIRCUIT ASSEMBLY (cont)

CIRCUIT NO.	DESCRIPTION	ESI PART NO.
K1,K4,K6	RELAY, FORM 1A, 5V, SIP	53599
K2,K5	RELAY, GB 822	26667
K3	RELAY, 1805 B-300 ELECTRODYNE	46286
Q1,Q2	XSTR, PNP/NPN ARRAY (WITH HEAT SINK)	55067
R1	RESISTOR, 8.2 kilohm, 1/2W, 5%	06181
R2	RESISTOR, 22 kilohm, 1/2W, 10%	02453
R3	RESISTOR, 820 ohm, 1W, 10%	26836
R4	RESISTOR, 47 ohm, 1W, 10%	53593
R5,R6	RESISTOR, 100 kilohm, 1/4W, 10%	13945
R7	RESISTOR, 18 ohm, 1W, 5%	55845
R8	RESISTOR, 90 kilohm, 0.01%	53953
R9	RESISTOR, 10 ohm, ESI QB, 0.005%	53952
R10	RESISTOR, 90 ohm, ESI QB, 0.005%	53954
R11	RESISTOR, 900 ohm, ESI QB, 0.005%	53956
R12	RESISTOR, 9 kilohm, ESI QB, 0.005%	53955
R13,R18,R25, R33-R35,R41	RESISTOR, 10 kilohm, 1/4W, 10%	13933
R14,R16,R24, R36	RESISTOR, 2 megohm, 1%	21772
R15	RESISTOR, 500 kilohm, VARIABLE, 20T	54104
R17	RESISTOR, 15 megohm, 10%	13976
R19-R23	RESISTOR, 2 kilohm, VARIABLE, 1/4W	46388
R26	RESISTOR, 2.55 ohm, 1/4W, 1%	21761
R27	RESISTOR, 1 kilohm, 1/4W, 1%	21730
R30,R42,R43	RESISTOR, 10 kilohm, 1%	21740
R31	RESISTOR, 9.53 kilohm, 1/4W, 1%	21762
R32,R49,R51, R60-R63	RESISTOR, 2.2 kilohm, 1/4W, 10%	13924

B.6 SP5240 (+200V DC BIAS OPTION) CIRCUIT ASSEMBLY (cont)

CIRCUIT NO.	DESCRIPTION	ESI PART NO.
R37-R40	RESISTOR, 2.7 ohm, 1/4W, 10%	13887
R44	RESISTOR, 4.99 kilohm, 1/4W, 1%	21737
R45,R46	RESISTOR, 10 kilohm, VARIABLE	46204
R47	RESISTOR, 150 ohm, 1/4W, 10%	13909
R48,R52,R53 R58	RESISTOR, 1 kilohm, 1/4W, 10%	13920
R54,R55	RESISTOR, 10 kilohm, VARIABLE, 20T	41902
R56,R57	RESISTOR, 10 ohm, 1/4W, 10%	13895
R65,R66	RESISTOR, 100 ohm, 1/4W, 10%	13907
R68	RESISTOR, 2.7 kilohm, 1/4W, 10%	13925
T1	TRANSFORMER	46480
TP1-TP8	TERMINAL, TURRET	52073
U1,U19	IC, HA5115	53895
U2,U3,U6,U8	IC, LF356N	41473
U4,U10,U20	IC, 4052AE	20743
U5	IC, CD4051	40841
U7	IC, LM311	29544
U11,U13	IC, TL074	43299
U12	IC, 74S472, PROGRAMMED	53960
U14,U17	IC, AD7524JN DAC	45652
U15	IC, DIP RESISTORS R698-3-R10K	43077
U16	IC, SIP RESISTORS	47328
U18,U21	IC, 7475N	20614
U22	IC, AD7548 DAC	54174
U23	IC, 7406	20678
U24	IC, 74LS373	46201

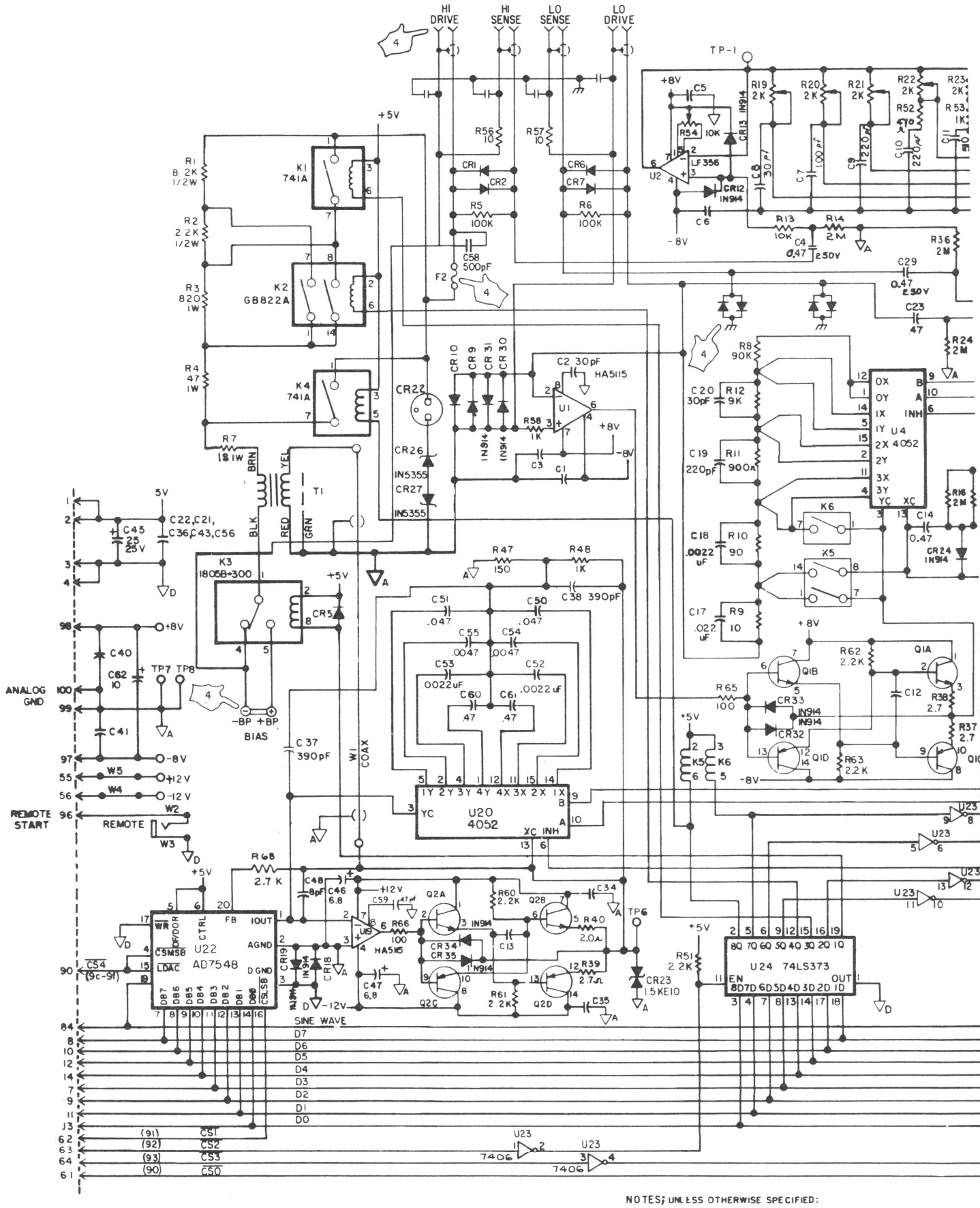

NOTES; UNLESS OTHERWISE SPECIFIED:

1. ALL RESISTOR VALUES ARE IN OHMS, 1/4 W, 10%.
2. ALL CAPACITORS ARE IN μF , UNLISTED VALUES ARE 0.1 μ
3. ALL DIODES ARE IN4005.

4 COMPONENTS NOTED ARE MOUNTED ON THE REAR PANEL.

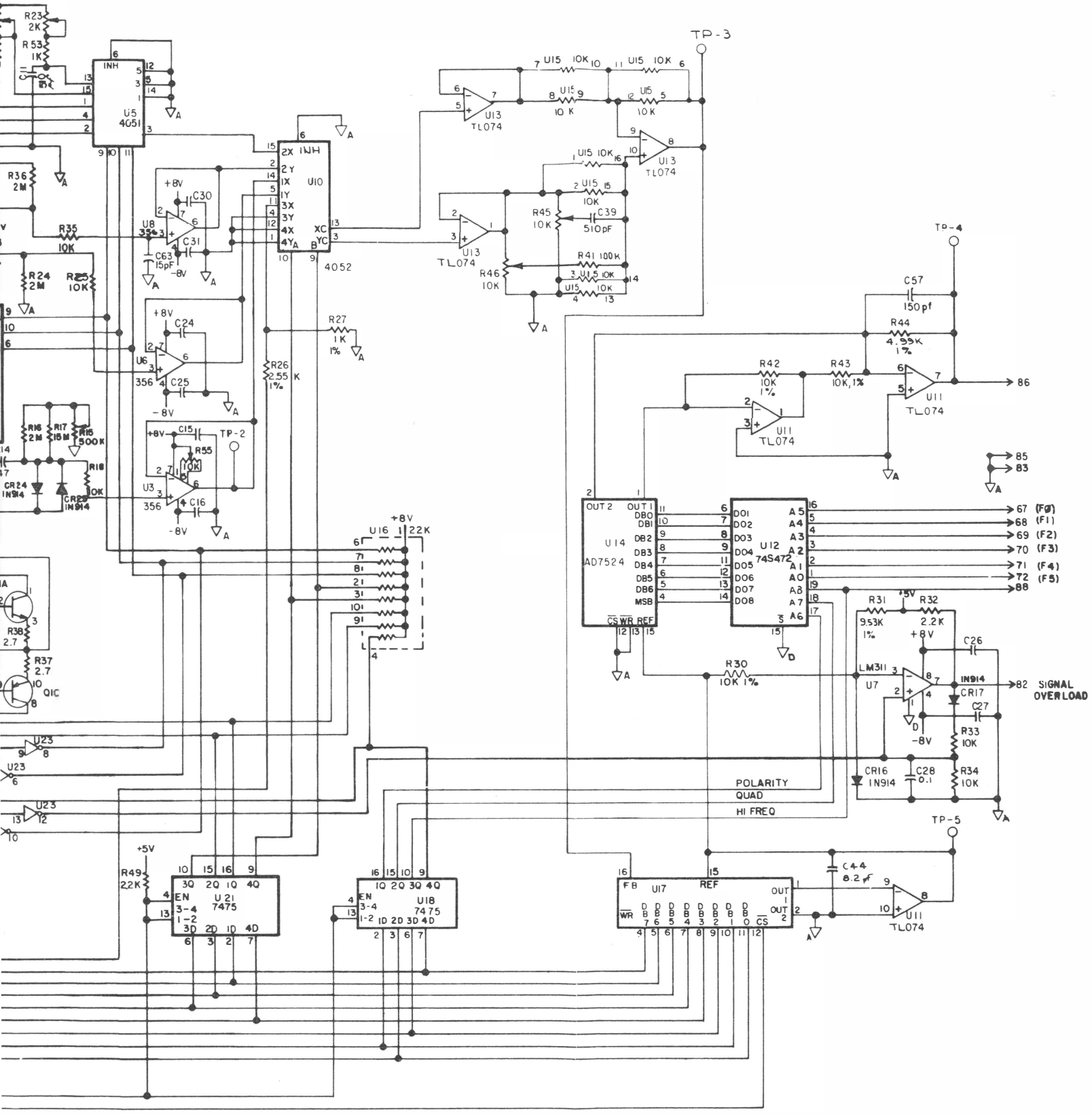

ARE 0.1 μF.

PANEL.

Figure B-6. Model SP5240 (+200V DC Bias Option) Circuit Assembly (P/N 56482)

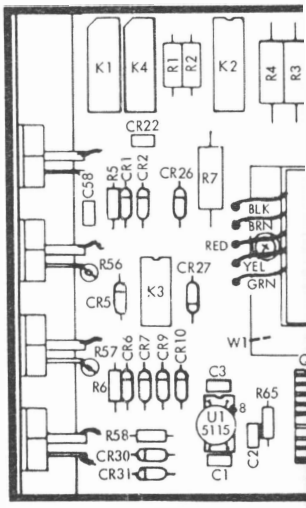
K1
K4
R1
R2
K2
R4
R3
CR22
C58
R5
CR1
CR2
CR26
R7
BLK
BRN
RED
YEL
GRN
R56
CR5
K3
CR27
W1
R57
CR6
CR7
CR9
CR10
C3
R6
U1
5115
8
R65
R58
CR30
CR31
C1
C2

Figure B-

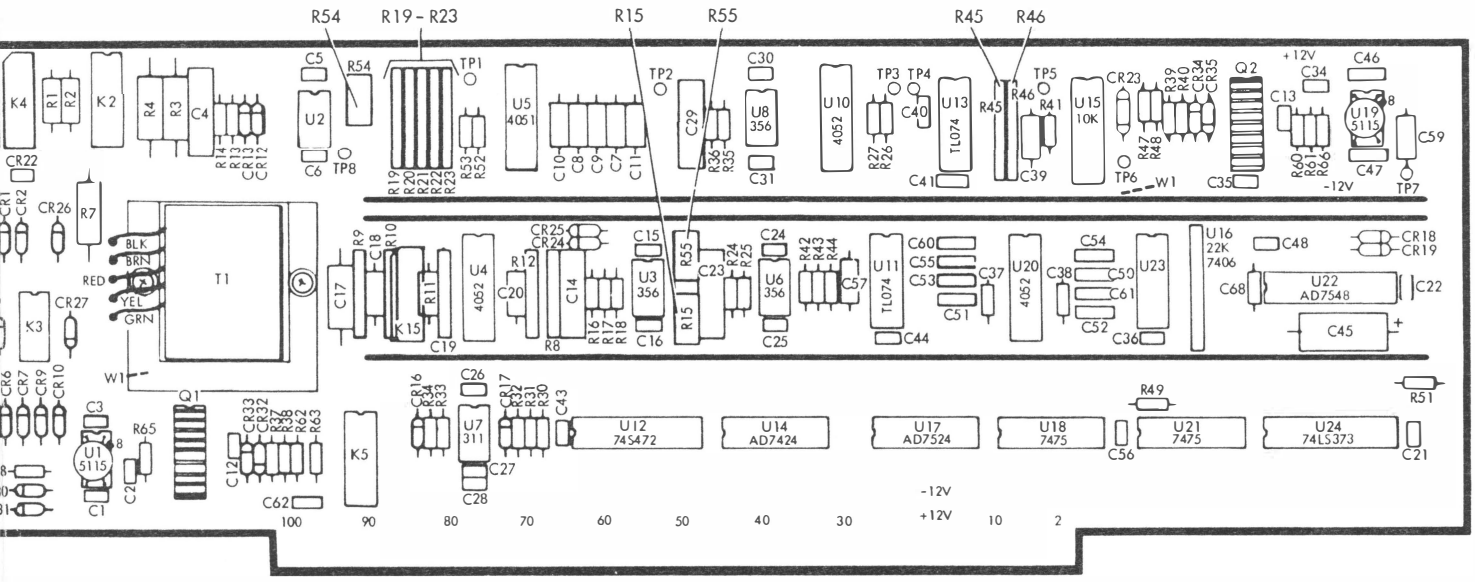

Figure B-6. Model SP5240 (+200V DC Bias Option) Circuit Assembly (P/N 56482) (cont)

WARRANTY OF TRACEABILITY

The reference standards of measurement of Electro Scientific Industries, Inc., are compared with the U.S. National Standards through frequent tests by the U.S. National Bureau of Standards. The ESI working standards and testing apparatus used are calibrated against the reference standards in a rigorously maintained program of measurement control.

The manufacture and final calibration of all ESI instruments are controlled by the use of ESI reference and working standards and testing apparatus in accordance with established procedures and with documented results. (Reference MIL-STD 45662)

Final calibration of this instrument was performed with reference to the mean values of the ESI reference standards or to ratio devices that were verified at the time and place of use.

DISCLAIMER OF IMPLIED WARRANTIES

THE FOREGOING WARRANTY OF ESI® IS IN LIEU OF ALL OTHER WARRANTIES, EXPRESS OR IMPLIED. ESI SPECIFICALLY DISCLAIMS ANY IMPLIED WARRANTIES OR MERCHANTABILITY OR FITNESS FOR A PARTICULAR PURPOSE. In no event will ESI be liable for special or consequential damages. Purchaser's sole and exclusive remedy in the event any item fails to comply with the foregoing express warranty of ESI shall be to return the item to ESI, shipping charges prepaid, and at the option of ESI obtain a replacement item or a refund of the purchase price.

esi® Part Number 1866 4/84

Electro Scientific Industries, Inc.
13900 N.W. Science Park Drive ▪ Portland, Oregon 97229 ▪ Telephone: (503) 641-4141